SPECIFICATIONS FOR FLUX LED

MODEL: 1840RGBC

Part No.	1840RGBC				
Emitted Color	Red	Green	Blue	Len's Color	Water Clear
Chip Material	AlGaInP	InGaN			

Features:

Compatible with automatic placement equipment

Compatible with reflow solder process

This product doesn't contain restriction Substance, comply ROHS standard.

Applications:

Automotive and Telecommunication

General use for indicators

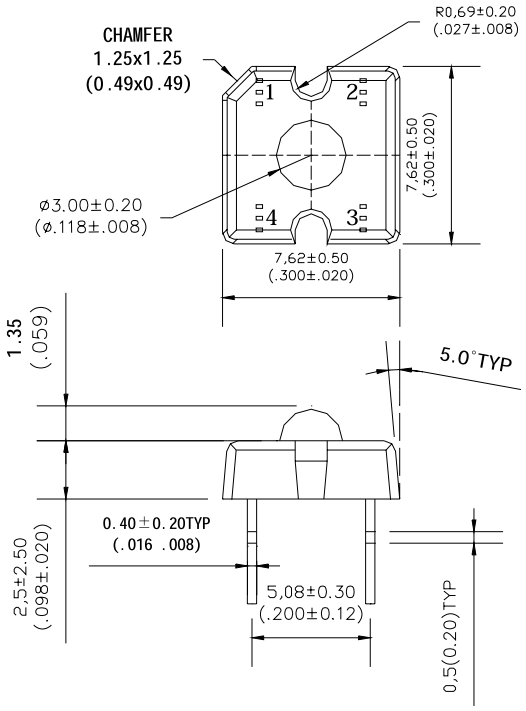

NOTE
1.BLUE
2.COMMON
3.GREEN
4.RED

GNL-1840RGBC-C

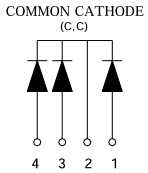

GNL-1840RGBC-A

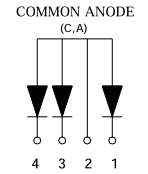

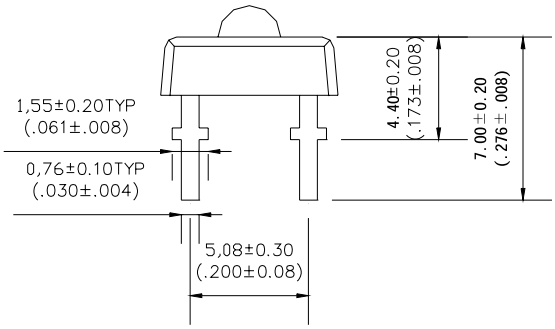

Unit mm

Toleranc 0.2mm unless otherwise noted