REVISION RECORD		
REV	DESCRIPTION	DRFT

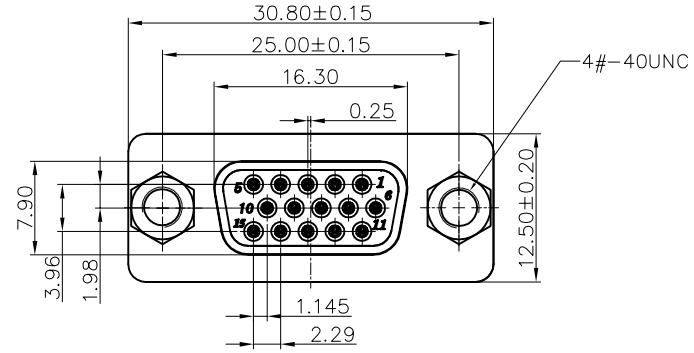

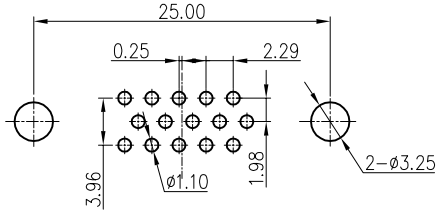

RECOMMENDED PCB LAYOUT

TOLERANCE: ±0.05

NOTES:

1. MATERIAL:
   1.1 HOUSING & COVER: LCP WITH 30% G.F, UL94 V-0
   COLOR: BLUE300u
   1.2 CONTACT: COPPER ALLOY;
   1.3 SHIELD: COPPER ALLOY;
   1.4 RIVET: COPPER ALLOY;
   1.5 SCREW: COPPER ALLOY.
2. FINISH:
   2.1 CONTACT:
   GOLD PLATED 1u" ON CONTACT AREA.
   2.54um [100u"] MIN. TIN PLATED ON SOLDER TAIL AREA.
   1.27um [50u"] MIN. NICKEL UNDERPLATED OVERALL.
   2.2 SHIELD:
   1.27um [50u"] MIN. NICKEL UNDERPLATED OVERALL.
   2.3 RIVET:
   1.27um [50u"] MIN. NICKEL UNDERPLATED OVERALL.
   2.4 SCREW:
   1.27um [50u"] MIN. NICKEL UNDERPLATED OVERALL.
3. RECOMMENDED P.C.B THICKNESS : 1.6mm
4. OTHER GENERAL SPEC. TO REFER : D-SUB SERIES SPEC.
5. FOR WAVE SOLDERING LEAD-FREE PROCESS

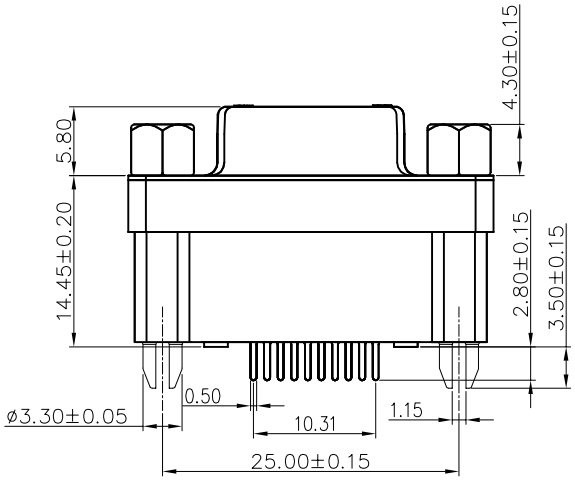

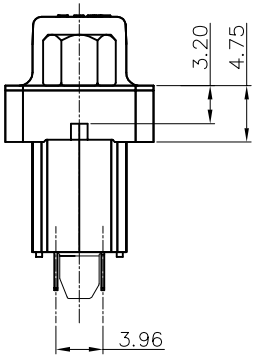

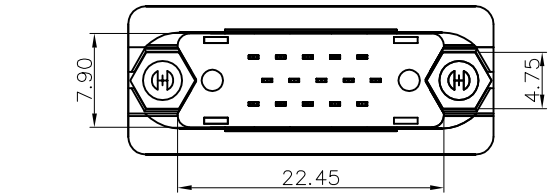

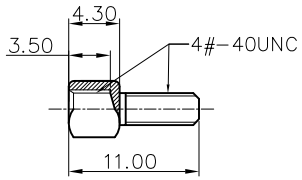

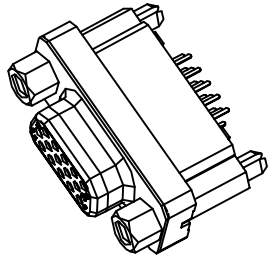

DETACHED LISTS	MM (INCH)	DFTO Roy	DATE 12/17/2012
	TOLERANCES EXCEPT AS NOTED	CHKD	DATE
	MM .0 ± 0.35 .00 ± 0.25 .000 ± 0.15 / X.X° ±3° X.XX° ±2° X.XXX° ±1°	APPVL	DATE
		MATERIAL :	
	ANGLES :	QT'Y :	
	THIRD ANGLE PROJECTION	FINISH :	
		SCALE : 1:1	

Pulse Electronics

RoHS Compliant

TITLE D-SUB15P 180°HIGH TAIL STYLE WITH SCREW

DRAWING NO. E9215-010-01 | SIZE A3 | REV 01

/PART NO. E9215-010-01

DO NOT SCALE DRAWING | SHEET 1 OF 1