YD package
JEDEC DO-200AD

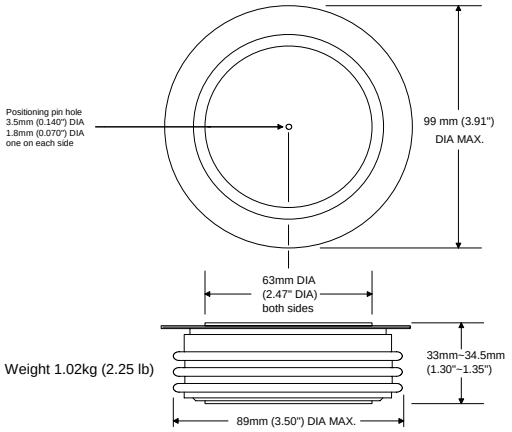

Weight 1.02kg (2.25 lb)

Short Form Data Sheet

Part number scheme

Y	D	25	N	45	KNX
1	2	3	4	5	6

1) Package designation
2) Diode designation (i.e. Rectifier)
3) Series number
4) Designates standard recovery time
5) Voltage Multiplier (example: 45 x 100 = 4500)
6) Proprietary suffix

Features:

- ✓ All diffused silicone.
- ✓ Disk press package (nick named, Hockey Puck)
- ✓ Metal and ceramic package construction.
- ✓ Double side cooling.

Voltage

Parameter	Symbol	Rating	Units
Maximum Repetitive Reverse Voltage Notes: 1, 3, 4, 5, 6	V_{RRM}	3000 ~ 5000	Volts
Maximum non repetitive Surge of Reverse Voltage Notes: 2, 3, 4, 5, 6	V_{RSM}	V_{RRM} + 100	Volts

Note 1: T_J 25°C. Note 2: T_J 125°C. Note 3: Measured at the peak of the sine wave, Note 4: Below 0°C derate V_{DRM} and V_{RRM} 10%.
Note 5: V_{DRM} and V_{RRM} have I_{DRM}, I_{RRM} of up to 50mA. Note 6: V_{DR} and V_{RR} have typical I_{DR}, I_{RR} of 2~7mA. Note 7: For DC applications derate V_{DRM} 45%.

Specifying voltage: 3500V, YD25N35 4500V, YD25N45
3000V, YD25N30 4000V, YD25N40 5000V, YD25N50 Above 5000V inquire for availability.

Current

Parameter	Symbol	Rating	Units
Maximum, Average Current Notes: 3, 4	$I_{F(AVE)}$	2,500	Amperes
Maximum, RMS Current Notes: 3, 4	$I_{F(RMS)}$	2,925	Amperes
Maximum non repetitive Surge Current with no reverse voltage reapplied. Notes: 2, 4	I_{FSM} 0%V_{RRM}	24.7	kA
I_{RR} = Typical Repetitive, Reverse, Current. Note: 1	I_{RR}	3 ~ 7	mA
Maximum Forward Voltage drop at Maximum Forward Current	V_{FM} @ I_{FM}	1.6 @ 3000	V @ A
I_{RRM} = Maximum (threshold), Repetitive, Reverse, Current. Note: 1	I_{RRM}	50	mA
Fuse's absolute maximum I^2t with no reverse voltage reapplied Note: 2, 4	I^2 t, 0% V_{RR}	1,250	kA
Reverse Recovery Charge (C_S = Stored Charge)	Q_{RR}	Consult factory	μC_s

Note 1: T_J 25°C. Note 2: T_J 125°C. Note 3: T_{Case} 55°C, double side air cooled. Note 4: 180° conduction, 60Hz sine wave.

Thermal & Mechanical

Parameter	Symbol	Rating	Units
Operating Temperature Range	T_J	-40° ~ 180°	°Celsius
Maximum Thermal resistance, Junction to Case Notes:1, 3, 5	R_{th-J-C}	0.016	°C/W
Mounting Pressure		3600 ~ 4500	kg
		8000 ~ 10000	lb.
Weight		1,020	Grams
		36	oz.

Note 1: Recommended mounting pressure applied Note 2: Mounting surfaces flat and greased Note 3: Double side cooled
Note 4: Case Temperature measured at cathode flange Note 5: 180° on-state