REV.	DESCRIPTION	DATE	APPROVED
A	Engineering Update w/o Changes	02/20/04	M. C.

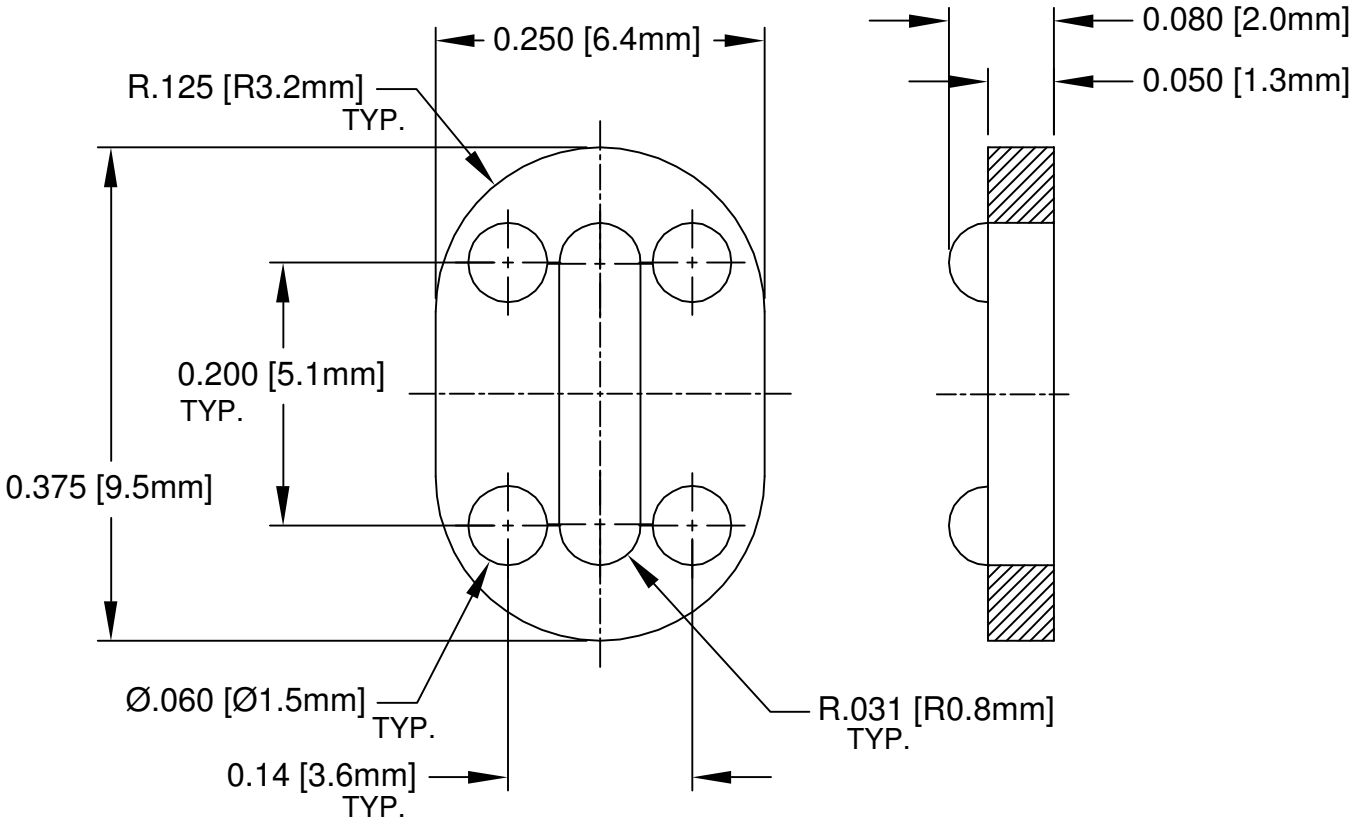

2. MATERIAL: NYLON 6/6, 94V-2, WHITE. BIVAR MATERIAL CODE 04-WE.
   BASF ULTRAMID NYLON 6/6 A3K WHITE.
1. GENERAL SPECIFICATIONS: BIVAR MOLDED COMPONENT SPECIFICATION BV00-E101.

STANDARD TOLERANCE
(UNLESS OTHERWISE SPECIFIED)

DECIMALS		ANGULAR
.X	± .1	X° ± 1°
.XX	± .01	
.XXX	± .005	

BIVAR®
4 THOMAS, IRVINE, CA. 92618
TEL: (949) 951-8808 FAX: (949) 951-3974

TITLE: INTEGRATED CIRCUIT MOUNT

DESIGNED:	DATE:	PART NO:	REVISION:
Shane Irving	11/02/98	420-078	A
CHECKED: D. Green	DATE: 02/20/04	CAGE CODE : 32559	SHEET # 1 OF 1

CAD GENERATED DOCUMENT, DO NOT MEASURE DRAWING.