ALPHA & OMEGA SEMICONDUCTOR

AO7405

30V P-Channel MOSFET

General Description

The AO7405 uses advanced trench technology to provide excellent $R_{DS(ON)}$, low gate charge, and operation with gate voltages as low as 2.5V, in the small SOT363 footprint. It can be used for a wide variety of applications, including load switching, low current inverters and low current DC-DC converters.

Product Summary

V_{DS}	-30V
I_D (at V_{GS}=-10V)	-1.4A
$R_{DS(ON)}$ (at V_{GS}=-10V)	< 115mΩ
$R_{DS(ON)}$ (at V_{GS} =-4.5V)	< 140mΩ
$R_{DS(ON)}$ (at V_{GS} =-2.5V)	< 200mΩ

Green Product

SC70-6L (SOT363)

Top View

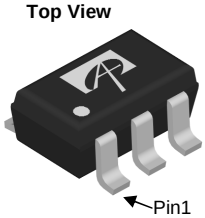

Bottom View

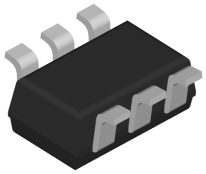

Pin1

Top View

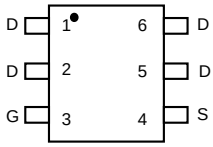

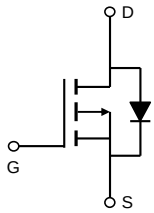

Absolute Maximum Ratings T_A=25°C unless otherwise noted

Parameter		Symbol	Maximum	Units
Drain-Source Voltage		V_{DS}	-30	V
Gate-Source Voltage		V_{GS}	±12	V
Continuous Drain Current	T_A=25°C	I_D	-1.4	A
	T_A=70°C		-1.0	
Pulsed Drain Current [C]		I_{DM}	-10	
Power Dissipation [B]	T_A=25°C	P_D	0.35	W
	T_A=70°C		0.22	
Junction and Storage Temperature Range		T_J, T_{STG}	-55 to 150	°C

Thermal Characteristics

Parameter		Symbol	Typ	Max	Units
Maximum Junction-to-Ambient [A]	t ≤ 10s	$R_{\theta JA}$	300	360	°C/W
Maximum Junction-to-Ambient [A D]	Steady-State		340	425	°C/W
Maximum Junction-to-Lead	Steady-State	$R_{\theta JL}$	280	320	°C/W

Electrical Characteristics (T_J=25°C unless otherwise noted)

Symbol	Parameter	Conditions	Min	Typ	Max	Units
STATIC PARAMETERS						
BV_{DSS}	Drain-Source Breakdown Voltage	I_D=-250µA, V_{GS}=0V	-30			V
I_{DSS}	Zero Gate Voltage Drain Current	V_{DS}=-30V, V_{GS}=0V			-1	µA
		T_J=55°C			-5	
I_{GSS}	Gate-Body leakage current	V_{DS}=0V, V_{GS}= ±12V			±100	nA
$V_{GS(th)}$	Gate Threshold Voltage	V_{DS}=V_{GS} I_D=-250µA	-0.6	-1	-1.4	V
$I_{D(ON)}$	On state drain current	V_{GS}=-10V, V_{DS}=-5V	-10			A
$R_{DS(ON)}$	Static Drain-Source On-Resistance	V_{GS}=-10V, I_D=-1.4A		92.5	115	mΩ
		T_J=125°C		130	160	
		V_{GS}=-4.5V, I_D=-1.2A		110	140	mΩ
		V_{GS}=-2.5V, I_D=-1A		150	200	mΩ
g_{FS}	Forward Transconductance	V_{DS}=-5V, I_D=-1.4A		6		S
V_{SD}	Diode Forward Voltage	I_S=-1A,V_{GS}=0V		-0.78	-1	V
I_S	Maximum Body-Diode Continuous Current				-0.5	A
DYNAMIC PARAMETERS						
C_{iss}	Input Capacitance	V_{GS}=0V, V_{DS}=-15V, f=1MHz		260	315	pF
C_{oss}	Output Capacitance			37		pF
C_{rss}	Reverse Transfer Capacitance			20		pF
R_g	Gate resistance	V_{GS}=0V, V_{DS}=0V, f=1MHz	4	8	12	Ω
SWITCHING PARAMETERS						
Q_g(10V)	Total Gate Charge	V_{GS}=-10V, V_{DS}=-15V, I_D=-1.4A		5.9	7.2	nC
Q_g(4.5V)	Total Gate Charge			2.8	3.5	nC
Q_{gs}	Gate Source Charge			0.7		nC
Q_{gd}	Gate Drain Charge			1		nC
$t_{D(on)}$	Turn-On DelayTime	V_{GS}=-10V, V_{DS}=-15V, R_L=10Ω, R_{GEN}=3Ω		6		ns
t_r	Turn-On Rise Time			3.5		ns
$t_{D(off)}$	Turn-Off DelayTime			20		ns
t_f	Turn-Off Fall Time			5		ns
t_{rr}	Body Diode Reverse Recovery Time	I_F=-1.4A, dI/dt=100A/µs		11.5	15	ns
Q_{rr}	Body Diode Reverse Recovery Charge	I_F=-1.4A, dI/dt=100A/µs		4.5		nC

A. The value of $R_{\theta JA}$ is measured with the device mounted on 1in^2 FR-4 board with 2oz. Copper, in a still air environment with T_A =25°C. The value in any given application depends on the user's specific board design.

B. The power dissipation P_D is based on $T_{J(MAX)}$=150°C, using ≤ 10s junction-to-ambient thermal resistance.

C. Repetitive rating, pulse width limited by junction temperature $T_{J(MAX)}$=150°C. Ratings are based on low frequency and duty cycles to keep initialT_J=25°C.

D. The $R_{\theta JA}$ is the sum of the thermal impedance from junction to lead $R_{\theta JL}$ and lead to ambient.

E. The static characteristics in Figures 1 to 6 are obtained using <300µs pulses, duty cycle 0.5% max.

F. These curves are based on the junction-to-ambient thermal impedance which is measured with the device mounted on 1in^2 FR-4 board with 2oz. Copper, assuming a maximum junction temperature of $T_{J(MAX)}$=150°C. The SOA curve provides a single pulse ratin g.

THIS PRODUCT HAS BEEN DESIGNED AND QUALIFIED FOR THE CONSUMER MARKET. APPLICATIONS OR USES AS CRITICAL COMPONENTS IN LIFE SUPPORT DEVICES OR SYSTEMS ARE NOT AUTHORIZED. AOS DOES NOT ASSUME ANY LIABILITY ARISING OUT OF SUCH APPLICATIONS OR USES OF ITS PRODUCTS. AOS RESERVES THE RIGHT TO IMPROVE PRODUCT DESIGN, FUNCTIONS AND RELIABILITY WITHOUT NOTICE.

TYPICAL ELECTRICAL AND THERMAL CHARACTERISTICS

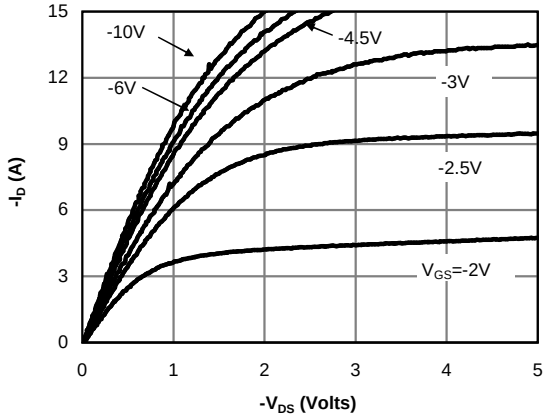

Fig 1: On-Region Characteristics (Note E)

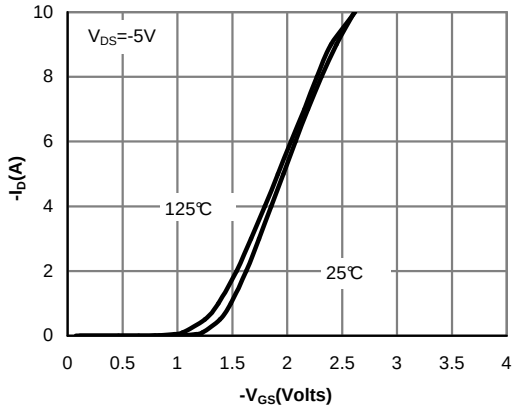

Figure 2: Transfer Characteristics (Note E)

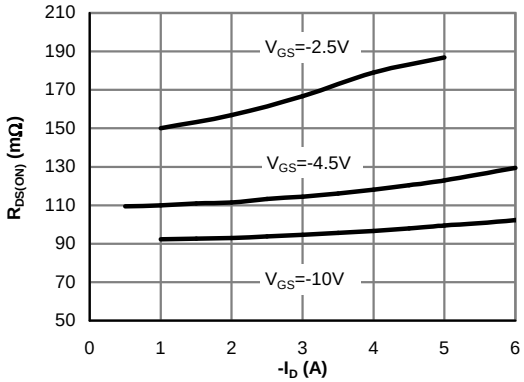

Figure 3: On-Resistance vs. Drain Current and Gate Voltage (Note E)

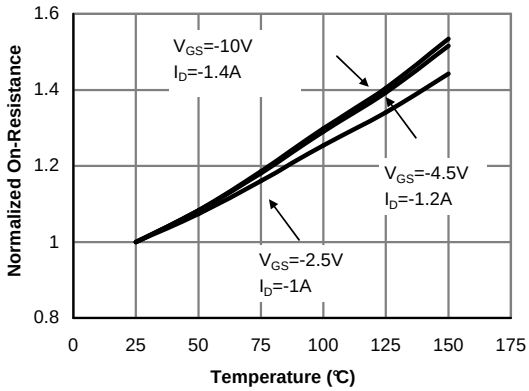

Figure 4: On-Resistance vs. Junction Temperature (Note E)

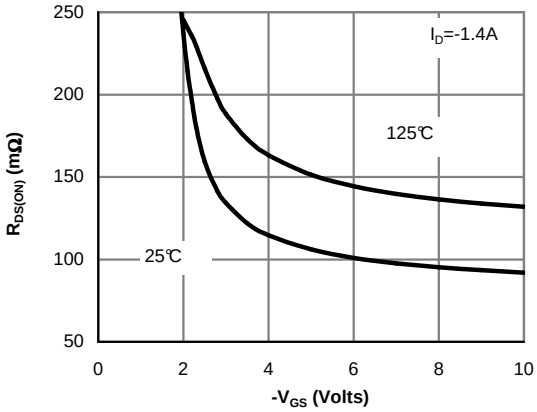

Figure 5: On-Resistance vs. Gate-Source Voltage (Note E)

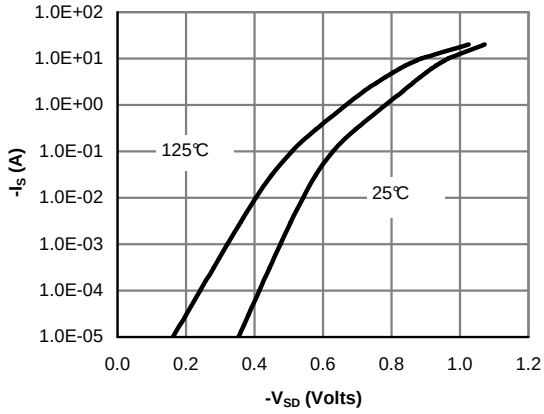

Figure 6: Body-Diode Characteristics (Note E)

TYPICAL ELECTRICAL AND THERMAL CHARACTERISTICS

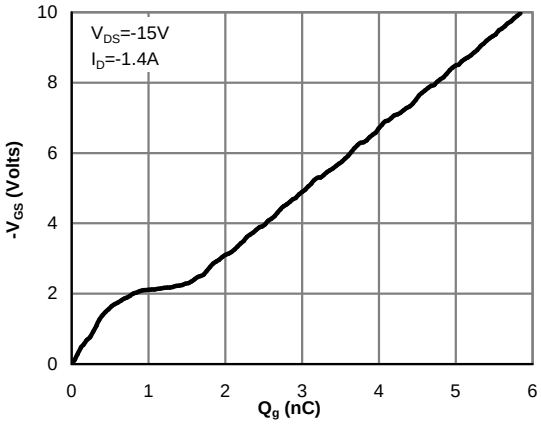

Figure 7: Gate-Charge Characteristics

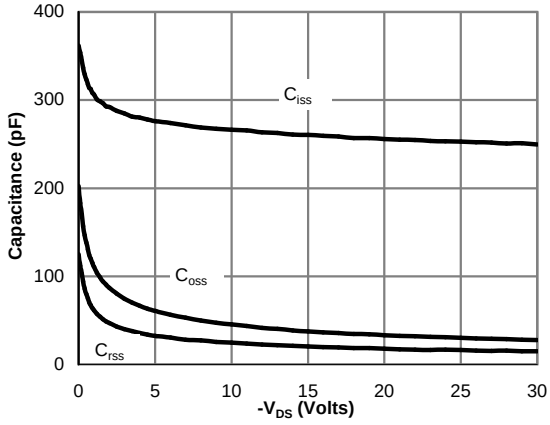

Figure 8: Capacitance Characteristics

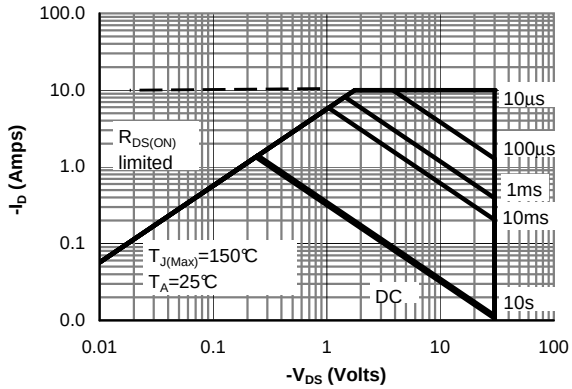

Figure 9: Maximum Forward Biased Safe Operating Area (Note F)

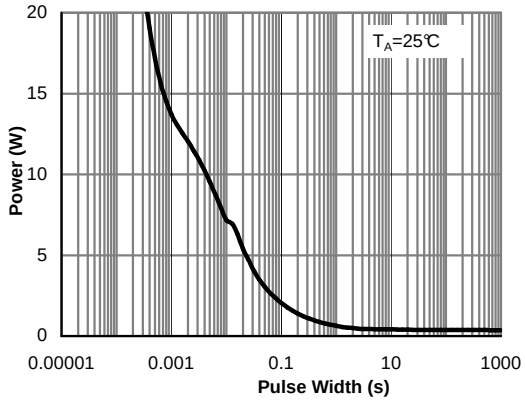

Figure 10: Single Pulse Power Rating Junction-to-Ambient (Note F)

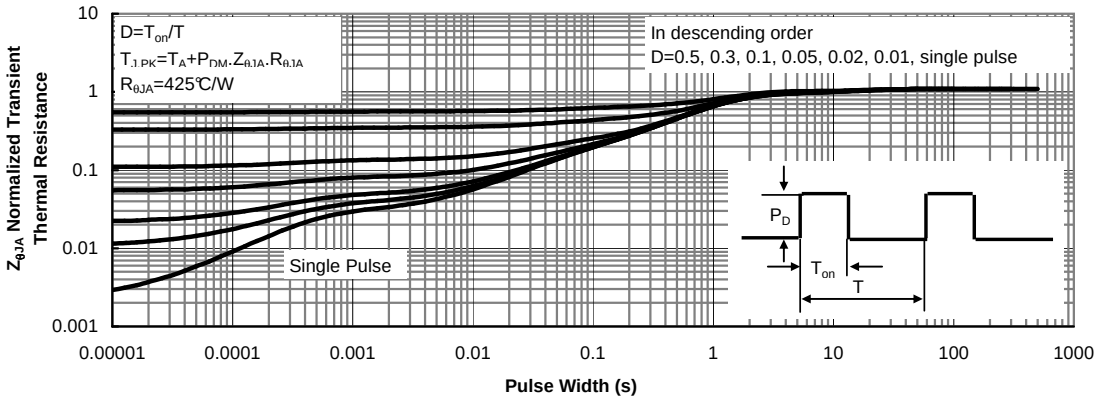

Figure 11: Normalized Maximum Transient Thermal Impedance (Note F)

Gate Charge Test Circuit & Waveform

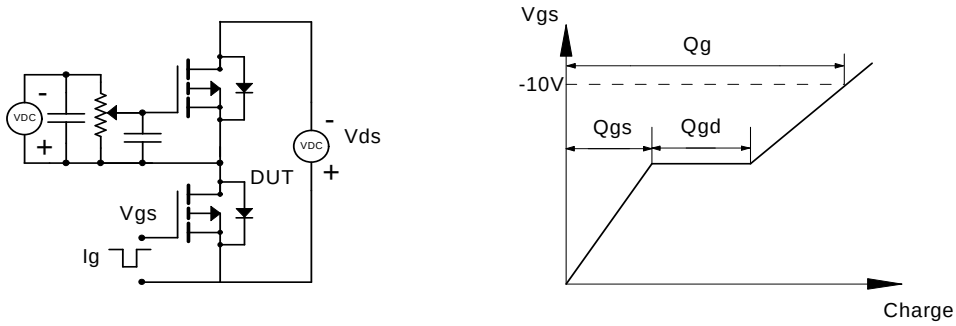

Resistive Switching Test Circuit & Waveforms

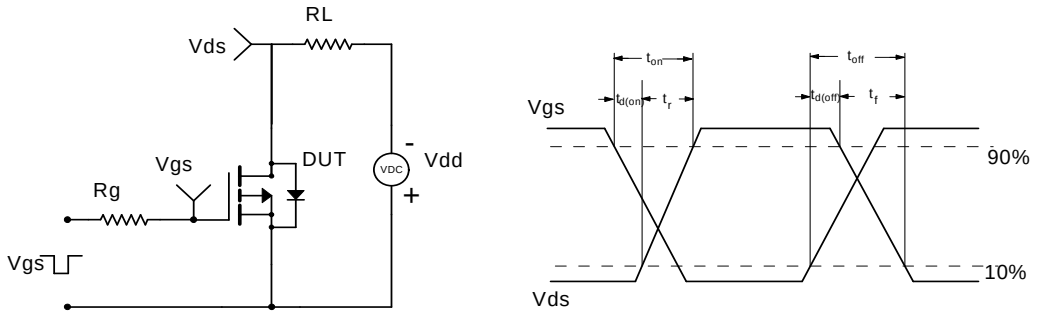

Unclamped Inductive Switching (UIS) Test Circuit & Waveforms

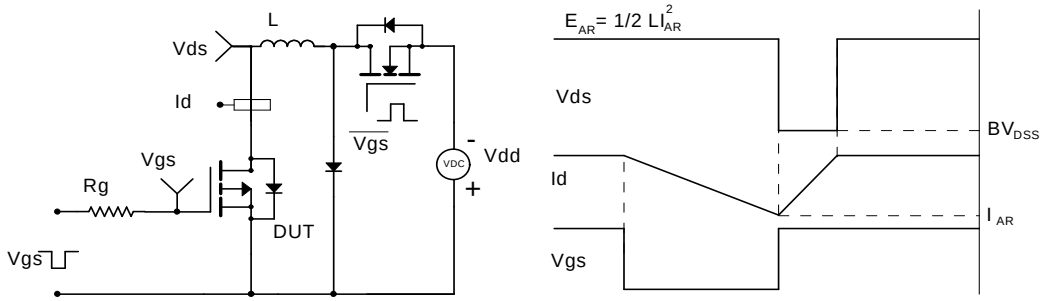
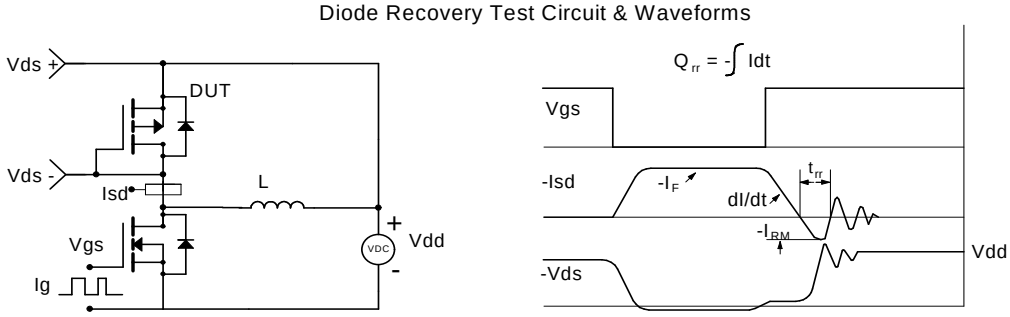
Diode Recovery Test Circuit & Waveforms