ATV04A4V0-G Thru. ATV04A441-G

Working Peak Reverse Voltage: 4.0 to 440 Volts
Power Dissipation: 400 Watts
RoHS Device

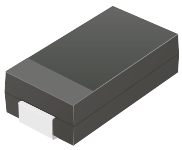

Features

- Glass passivated chip.
- 400W peak pulse power capability with a 10/1000 μs waveform, repetitive rate (duty cycle):0.01%
- Low leakage.
- Uni and Bidirectional unit.
- Excellent clamping capability.
- Very fast response time.
- Comply with AEC-Q101

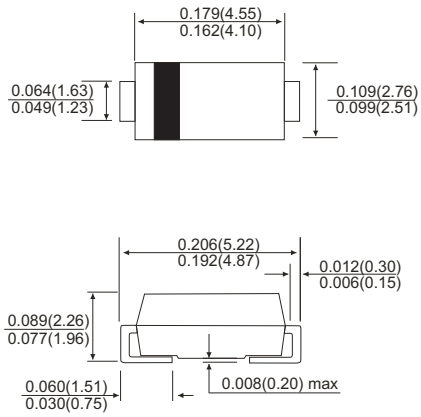

Mechanical data

- Epoxy: UL 94V-0 rate flame retardant.
- Case: SMA/DO-214AC, molded plastic.
- Terminals: solderable per MIL-STD-750, method 2026.
- Polarity: Color band denotes cathode end execpt Bipolar.
- Approx. weight: 0.064 grams

Maximum Ratings and Electrical Characteristics

Ratings at 25°C ambient temperature unless otherwise specified.
Single phase, half wave, 60Hz, resistive or inductive load.
For capacitive load, derate current by 20%.

Characteristics	Symbol	Value	Units
Peak power dissipation on 10/1000μS waveform (Note1)	P_{PPM}	400	W
Peak pulse current on 10/1000 μS waveform (Note 1)	I_{PPM}	See Next Table	A
Steady state power dissipation at T_L=75°C	$P_{M(AV)}$	1.0	W
Peak forward surge current, 8.3mS single half sine-wave unidirectional only (Note 2)	I_{FSM}	40	A
Maximum instantaneous forward voltage at 25.0A for unidirectional only (Note 3)	V_F	3.5/5.0	V
Maximum operating junction temperature	T_J	-55 to +150	°C
Storage temperature range	T_{STG}	-55 to +150	°C

Notes:
1. Non-repetitive current pulse, per Fig. 5 and derated above T_A=25°C, per Fig. 1.
2. Measured on 8.3mS single half sine-wave or equare wave,duty cycle=4 pulses per minute maximum.
3. VF<3.5V for devices of V_{BR}<200V and V_F<5.0V for devices of V_{BR}>201V

Company reserves the right to improve product design , functions and reliability without notice.

RATING AND CHARACTERISTIC CURVES (ATV04A4V0-G Thru. ATV04A441-G)

Fig.1- Pulse Derating Curve

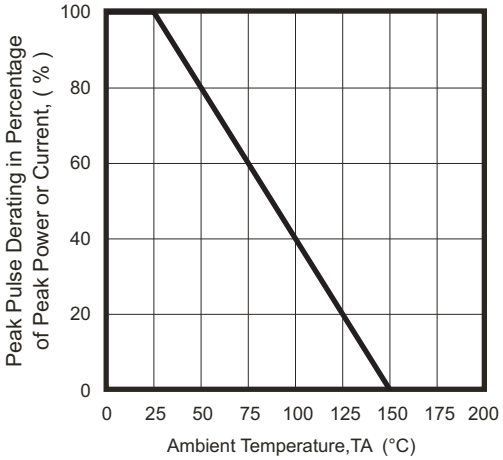

Fig.2- Maximum Non-Repetitive Surge Current

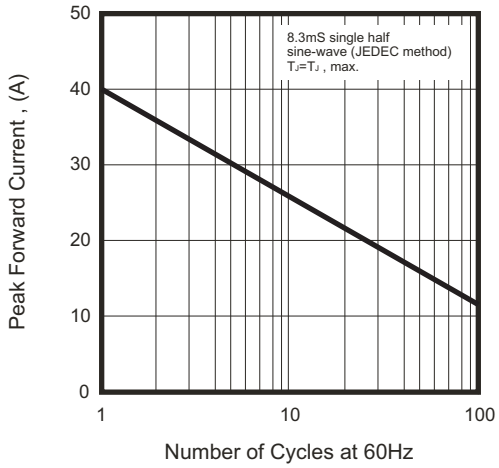

Fig.3- Steady State Power Derating Curve

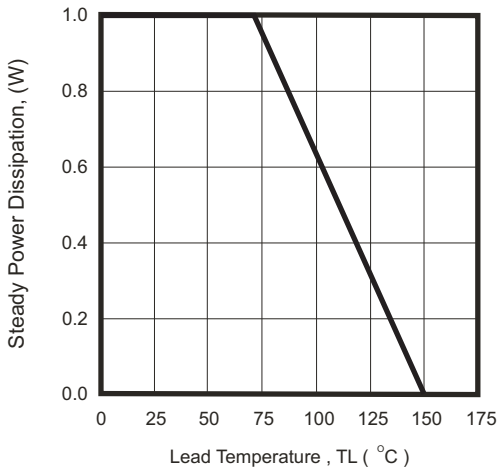

Fig.4- Peak Pulse Power Rating Curve

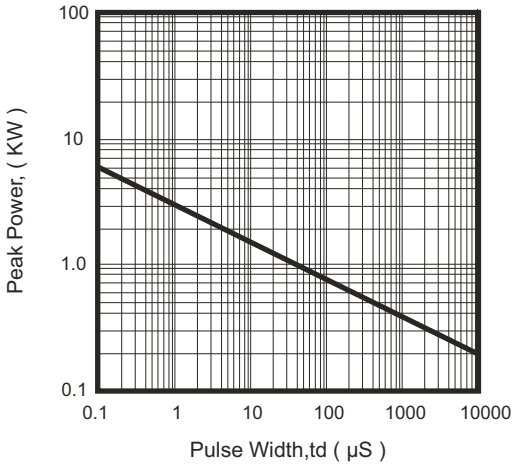

Fig.5- Pulse Waveforem

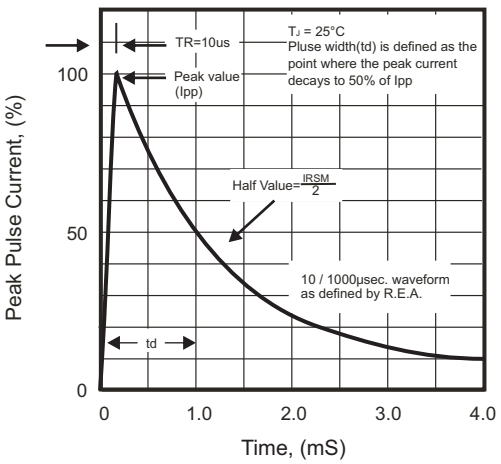

Fig.6- Typical Junction Capacitance

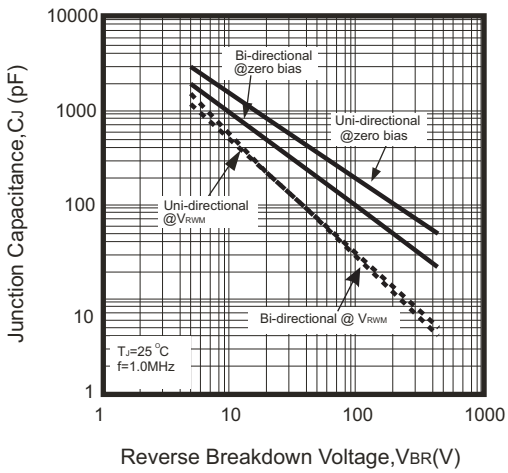

Electrical Characteristics (TV04A4V0-G Thru. TV04A441-G)

Part No	Absolute Maximum Rating (Ta=25°C)					Electrical Characteristic (Ta=25°C)			Marking Code	
	V_{RWM}	V_{BR} Min.	V_{BR} Max.	I_T	I_{FSM}	Max. V_C		I_R @ V_{RWM}		
	(V)	(V)	(V)	(mA)	(A)@8.3mS	(V)	I_{PP} (A)	(uA)	Uni	Bi
ATV04A4V0J(B)-G	4.00	5.89	6.51	10	40	8.60	46.50	800	AC	WC
ATV04A5V0J(B)-G	5.00	6.46	7.00	10	40	9.20	43.48	800	AE	WE
ATV04A6V0J(B)-G	6.00	6.67	7.37	10	40	10.3	38.83	800	AG	WG
ATV04A6V5J(B)-G	6.50	7.22	7.98	10	40	11.2	35.71	500	AK	WK
ATV04A7V0J(B)-G	7.00	7.78	8.60	10	40	12.0	33.33	200	AM	WM
ATV04A7V5J(B)-G	7.50	8.33	9.21	1	40	12.9	31.01	100	AP	WP
ATV04A8V0J(B)-G	8.00	8.89	9.83	1	40	13.6	29.41	50	AR	WR
ATV04A8V5J(B)-G	8.50	9.44	10.40	1	40	14.4	27.78	10	AT	WT
ATV04A9V0J(B)-G	9.00	10.00	11.10	1	40	15.4	25.97	5	AV	WV
ATV04A100J(B)-G	10.0	11.10	12.30	1	40	17.0	23.53	5	AX	WX
ATV04A110J(B)-G	11.0	12.20	13.50	1	40	18.2	21.98	5	AZ	WZ
ATV04A120J(B)-G	12.0	13.30	14.70	1	40	19.9	20.10	5	BE	XE
ATV04A130J(B)-G	13.0	14.40	15.90	1	40	21.5	18.60	5	BG	XG
ATV04A140J(B)-G	14.0	15.60	17.20	1	40	23.2	17.24	5	BK	XK
ATV04A150J(B)-G	15.0	16.70	18.50	1	40	24.4	16.39	5	BM	XM
ATV04A160J(B)-G	16.0	17.80	19.70	1	40	26.0	15.38	5	BP	XP
ATV04A170J(B)-G	17.0	18.90	20.90	1	40	27.6	14.49	5	BR	XR
ATV04A180J(B)-G	18.0	20.00	22.10	1	40	29.2	13.70	5	BT	XT
ATV04A190J(B)-G	19.0	20.10	23.30	1	40	30.8	13.00	5	BB	XB
ATV04A200J(B)-G	20.0	22.20	24.50	1	40	32.4	12.35	5	BV	XV
ATV04A220J(B)-G	22.0	24.40	26.90	1	40	35.5	11.27	5	BX	XX
ATV04A240J(B)-G	24.0	26.70	29.50	1	40	38.9	10.28	5	BZ	XZ
ATV04A260J(B)-G	26.0	28.90	31.90	1	40	42.1	9.50	5	CE	YE
ATV04A280J(B)-G	28.0	31.10	34.40	1	40	45.4	8.81	5	CG	YG
ATV04A300J(B)-G	30.0	33.30	36.80	1	40	48.4	8.26	5	CK	YK
ATV04A330J(B)-G	33.0	36.70	40.60	1	40	53.3	7.50	5	CM	YM
ATV04A360J(B)-G	36.0	40.00	44.20	1	40	58.1	6.88	5	CP	YP
ATV04A400J(B)-G	40.0	44.40	49.10	1	40	64.5	6.20	5	CR	YR
ATV04A430J(B)-G	43.0	47.80	52.80	1	40	69.4	5.76	5	CT	YT
ATV04A450J(B)-G	45.0	50.00	55.30	1	40	72.7	5.50	5	CV	YV
ATV04A480J(B)-G	48.0	53.30	58.90	1	40	77.4	5.17	5	CX	YX
ATV04A510J(B)-G	51.0	56.70	62.70	1	40	82.4	4.85	5	CZ	YZ
ATV04A540J(B)-G	54.0	60.00	66.30	1	40	87.1	4.59	5	RE	ZE
ATV04A580J(B)-G	58.0	64.40	71.20	1	40	93.6	4.27	5	RG	ZG
ATV04A600J(B)-G	60.0	66.70	73.70	1	40	96.8	4.13	5	RK	ZK
ATV04A640J(B)-G	64.0	71.10	78.60	1	40	103.0	3.88	5	RM	ZM
ATV04A700J(B)-G	70.0	77.80	86.00	1	40	113.0	3.54	5	RP	ZP
ATV04A750J(B)-G	75.0	83.30	92.10	1	40	121.0	3.31	5	RR	ZR
ATV04A780J(B)-G	78.0	86.70	95.80	1	40	126.0	3.17	5	RT	ZT
ATV04A800J(B)-G	80.0	88.80	97.60	1	40	129.6	3.09	5	RB	ZB
ATV04A850J(B)-G	85.0	94.40	104.00	1	40	137.0	2.92	5	RV	ZV
ATV04A900J(B)-G	90.0	100.00	111.00	1	40	146.0	2.74	5	RX	ZX
ATV04A101J(B)-G	100.0	111.00	123.00	1	40	162.0	2.47	5	RZ	ZZ
ATV04A111J(B)-G	110.0	122.00	135.00	1	40	177.0	2.26	5	SE	VE
ATV04A121J(B)-G	120.0	133.00	147.00	1	40	193.0	2.07	5	SG	VG
ATV04A131J(B)-G	130.0	144.00	159.00	1	40	209.0	1.91	5	SK	VK
ATV04A141J(B)-G	140.0	155.00	171.00	1	40	226.8	1.76	5	SB	VB
ATV04A151J(B)-G	150.0	167.00	185.00	1	40	243.0	1.65	5	SM	VM
ATV04A161J(B)-G	160.0	178.00	197.00	1	40	259.0	1.54	5	SP	VP
ATV04A171J(B)-G	170.0	189.00	209.00	1	40	275.0	1.45	5	SR	VR
ATV04A181J(B)-G	180.0	200.00	220.00	1	40	291.6	1.37	5	ST	VT
ATV04A191J(B)-G	190.0	211.00	232.00	1	40	307.8	1.30	5	SV	VV

Company reserves the right to improve product design , functions and reliability without notice.

Electrical Characteristics (TV04A4V0-G Thru. TV04A441-G)

Part No.	Absolute Maximum Rating (T_A =25°C)					Electrical Characteristic (T_A =25°C)				
	V_{RWM}	V_{BR} Min.	V_{BR} Max.	I_T	I_{FSM}	Max V_C		I_R@V_{RWM}	Marking Code	
	(V)	(V)	(V)	(mA)	(A)@8.3mS	(V)	I_{PP}(A)	(uA)	Uni	Bi
ATV04A201J(B)-G	200.0	224.00	247.00	1	40	324.0	1.23	5	SW	VW
ATV04A221J(B)-G	220.0	246.00	272.00	1	40	356.0	1.12	5	SX	VX
ATV04A251J(B)-G	250.0	279.00	309.00	1	40	405.0	0.99	5	SZ	VZ
ATV04A301J(B)-G	300.0	335.00	371.00	1	40	486.0	0.82	5	DE	HE
ATV04A351J(B)-G	350.0	391.00	432.00	1	40	567.0	0.71	5	DG	HG
ATV04A401J(B)-G	400.0	447.00	494.00	1	40	648.0	0.62	5	DK	HK
ATV04A441J(B)-G	440.0	492.00	543.00	1	40	713.0	0.56	5	DM	HM

Note:

1) Suffix J denotes 5% tolerance devices.
2) Suffix B after part number to specify Bi-directional devices.
3) For Bi-Directional devices having V_R of 10 volts and under, the I_R limit is double.

Reel Taping Specification

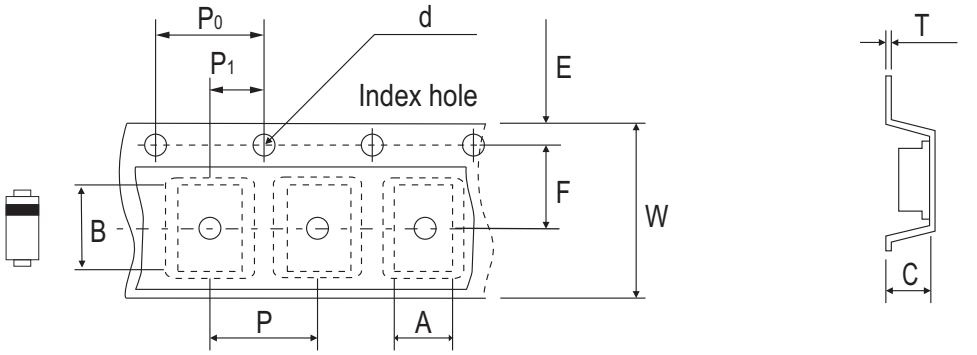

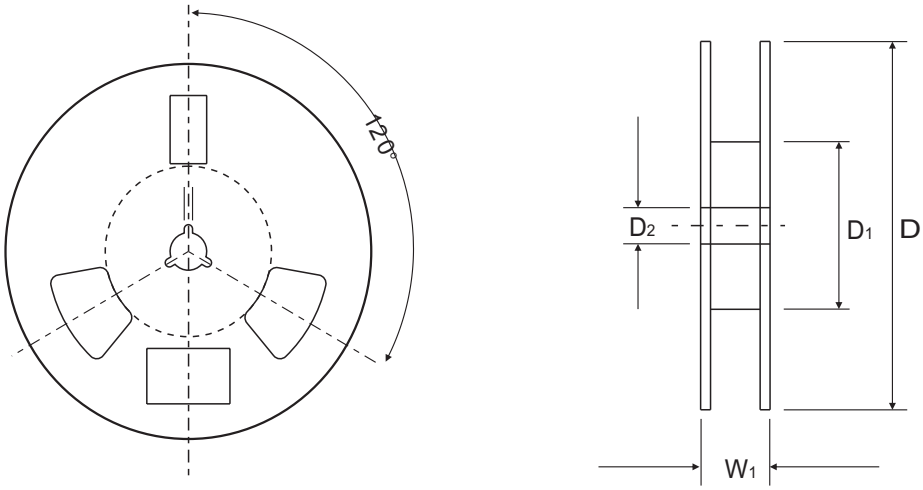

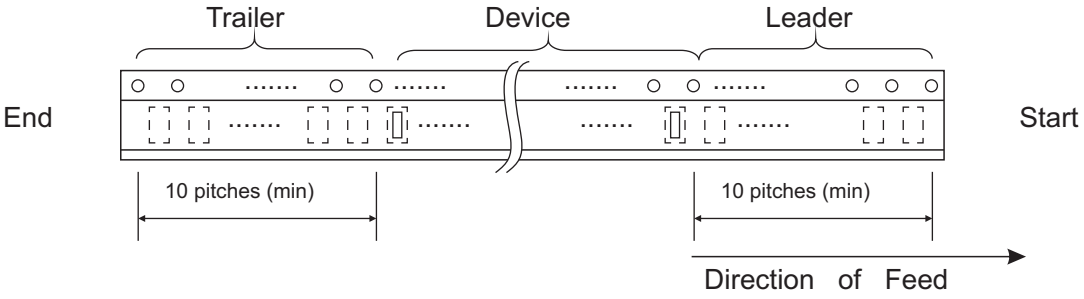

	SYMBOL	A	B	C	d	D	D1	D2
SMA/DO-214AC	(mm)	2.79 ± 0.10	5.33 ± 0.10	4.50 (max)	1.75 ± 0.10	330MAX	50.0 MIN.	13.0 ± 0.2
	(inch)	0.110 ± 0.004	0.210 ± 0.004	0.177 (max)	0.069 ± 0.004	13.00MAX	1.969 MIN.	0.512 ± 0.008

	SYMBOL	E	F	P	P0	P1	W	W1
SMA/DO-214AC	(mm)	1.75 ± 0.10	5.50 ± 0.05	4.00 ± 0.10	4.00 ± 0.10	2.00 ± 0.05	12.0 ± 0.30	18.4 MAX.
	(inch)	0.068 ± 0.004	0.216 ± 0.002	0.157 ± 0.004	0.157 ± 0.004	0.079 ± 0.002	0.472 ± 0.012	0.724 MAX

Company reserves the right to improve product design , functions and reliability without notice.

Marking Code

1. C: COMCHIP
2. : Package

○	PKG
A	SMA
B	SMB
C	SMC

3. XX: Marking code(see Page. 3~5)
4. ▮ Cathod Band

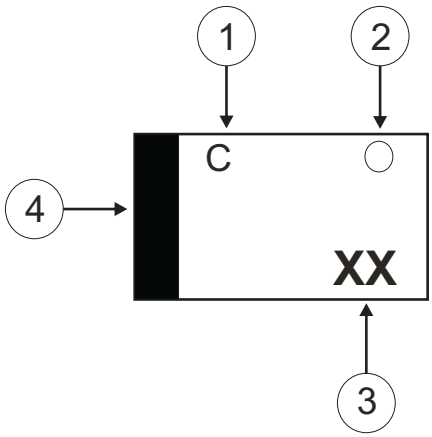

Suggested PAD Layout

SIZE	DO-214AC(SMA)	
	(mm)	(inch)
A	5.28	0.208
B	1.88 MAX	0.074 MAX
C	1.52 MIN	0.060 MIN
D	1.68 MIN	0.066 MIN

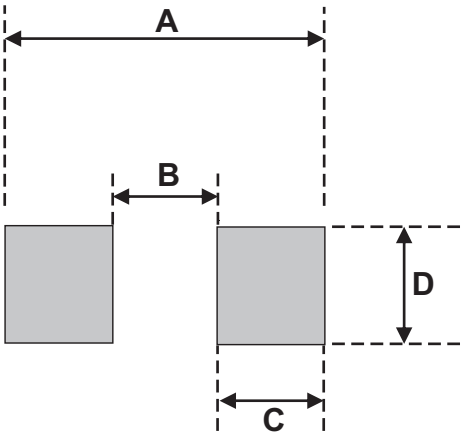

Standard Packaging

Case Type	REEL PACK	
	REEL (pcs)	Reel Size (inch)
SMA/DO-214AC	5,000	13