SynJet® Outdoor LED Cooler L100-270

SynJet cooling provides the most reliable thermal management solution available. This LED cooler has been developed by Nuventix for cooling high power LED Luminaires.

- Cools up to 235 W[4]
- Reliable 100K Hours Lifetime
- Outdoor Rated (IP56)[7]
- 5 Yr Warranty
- Small Form Factor
- Light Weight

Specifications[1]

Thermal & Acoustic (Single LED Heat Source 25cm^2)

SynJet Setting[2]	Θs-a[3] 3 SJ	TDP[4] (W) ΔT = 30° / 40°C 3 SJ	SPL (dBA)[5] 3 SJ	Wire Connections	
PWM at 100% duty cycle	0.21	143 / 190	36	Red to +VDC Black only to Ground Blue to PWM Signal	
High Performance	0.22	136 / 182	35	Red to +VDC Black & Blue to Ground	
Standard Performance	0.28	107 / 143	27	Red to +VDC Black only to Ground	
Silent Performance	0.34	88 / 118	23	Red to +VDC Black & Purple to Ground	

Thermal & Acoustic (3 LED Heat Sources 25cm^2 or One LED Heat Source 75cm^2)

SynJet Setting[6]	Θs-a[3] 3 SJ	TDP[4] (W) ΔT = 30° / 40°C 3 SJ	SPL (dBA)[5] 3 SJ	Wire Connections	
PWM at 100% duty cycle	0.17	176 / 235	36	Red to +VDC Black only to Ground Blue to PWM Signal	
High Performance	0.18	167 / 222	35	Red to +VDC Black & Blue to Ground	
Standard Performance	0.24	125 / 167	27	Red to +VDC Black only to Ground	
Silent Performance	0.30	100 / 133	23	Red to +VDC Black & Purple to Ground	

[1] All values are typical at 25ºC unless otherwise stated.
[2] The Level Select model should be used for discrete performance settings. Follow the instructions in the Product Design Guide for adjusting settings.
[3] Thermal resistance values are given as reference only and are measured in free air without airflow obstructions. Thermal resistance is measured from the bottom middle of the heat sink to ambient air measured at the inlet to the SynJet, with a heat source at least 25cm^2 using a reference heat sink. Actual thermal performance may vary by application and final product design should be tested to assure proper thermal performance.
[4] Thermal Design Power is based on a 30ºC or 40ºC temperature rise of heat sink mounting surface above ambient temperature around cooler.
[5] Sound Pressure Level is measured at 1 meter distance per ISO 7779.
[6] The Level Select model should be used for discrete performance settings. Follow the instructions in the Product Design Guide for adjusting settings.

Electrical

SynJet Setting[2]	Voltage (VDC) +/- 10%	Current (mA)[7]			Pavg (W) 1/3 SJ	Voltage (VDC) +/- 10%	Current (mA)[7]			Pavg (W) 1/3 SJ
		Imin 1/3 SJ	Iavg 1/3 SJ	Ipeak 1/3 SJ			Imin 1/3 SJ	Iavg 1/3 SJ	Ipeak 1/3 SJ	
PWM at 100% duty cycle	5	20/60	220/660	440/132	1.10/3.3	12	10/30	115/34	230/690	1.4/4.2
High Performance		20/60	180/540	360/108	0.90/2.7		10/30	92/276	184/552	1.1/3.3
Standard Performance		20/60	80/240	160/480	0.40/1.2		10/30	46/138	92/276	0.55/1.7
Silent Performance		20/60	60/180	120/360	0.30/0.90		10/30	33/99	66/198	0.40/1.2

Environmental

All Settings	Min	Max	Units	Conditions
Operating Temperature	-40	70	°C	Air temperature surrounding cooler
Storage Temperature	-50	75	°C	Air temperature surrounding cooler
Storage Altitude		15K	m	Above sea level
Operating Relative Humidity	5	95	%	Non-condensing
Weight		2.1	kg	SynJet with Al heat sink
Reliability		100K	hrs	L10 @ 60°C
Regulatory Compliance				RoHS, UL, FCC Part 15 Class B, CE

Mechanical

SynJet Cooling Solution shown with Configurable heat sink

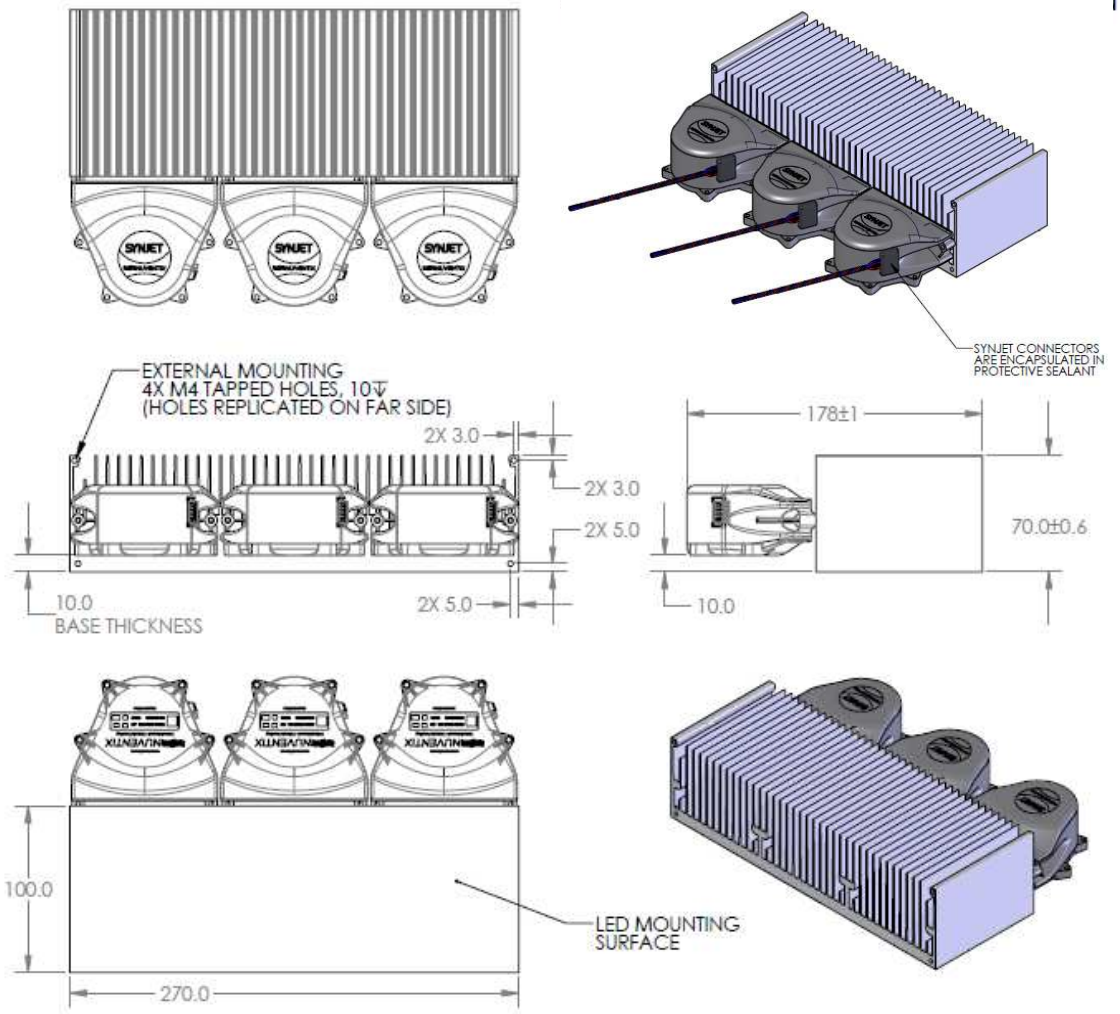

All dimensions are nominal and in mm unless otherwise stated. See product drawings for more detail.

[7] The SynJet has a time varying current. The current waveform is sinusoidal and the average current (Iavg) is used to calculate the average power consumption (Pavg) at nominal input voltage (VDC). See the Electrical section in the Product Design Guide for a detailed explanation.
[7] SynJet design guidelines for outdoor use must be followed to meet rated lifetime specifications.

SynJet Wire Harness

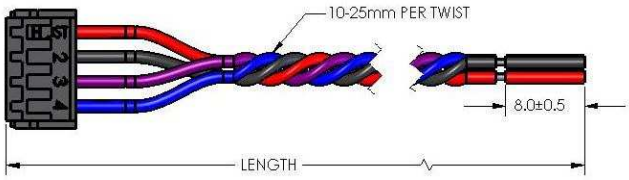

Connector Pinout

Pin	Wire Color	Symbol	Description
1	Red	+VDC	5 V or 12 V depending on model
2	Black	GND	Ground
3	Purple	CTRL2	Input for Level Select model Status signal for PWM model
4	Blue	CTRL1	Input for Level Select model PWM input for PWM model

IMPORTANT: SynJets should be completely wired to the power supply before the power supply is energized. The power supply should be turned off before the SynJet Cooler is disconnected. SynJet Coolers are not designed for “hot swap” or “hot plug” applications.

Part Numbers

Part Number	Description	Notes
NX202104	SynJet, XFlow 42, Outdoor, PWM, 5V, 600mm Wire Harness	Use with PWM input to control performance setting
NX202105	SynJet, XFlow 42, Outdoor, Level Select, 5V, 600mm Wire Harness	Configurable to discrete performance settings
NX202106	SynJet, XFlow 42, Outdoor, PWM, 12V, 600mm Wire Harness	Use with PWM input to control performance setting
NX202107	SynJet, XFlow 42, Outdoor, Level Select, 12V, 600mm Wire Harness	Configurable to discrete performance settings
NX302103	Heatsink, L100-270, Configurable, Black	Contact sales for other heatsink options
NX302113	Heatsink, L100-270, 2xZhaga LES3, Black	Contact sales for other heatsink options
NX302114	Heatsink, L100-270, 3xZhaga LES3, Black	Contact sales for other heatsink options
NX302115	Heatsink, L100-270, 2xBridgelux RS, Black	Contact sales for other heatsink options
NX302116	Heatsink, L100-270, 3xBridgelux RS, Black	Contact sales for other heatsink options
NX302117	Heatsink, L100-270, 2xCitizen CLL050, Black	Contact sales for other heatsink options
NX302118	Heatsink, L100-270, 3xCitizen CLL050, Black	Contact sales for other heatsink options
NX302119	Heatsink, L100-270, 2xVossloh Schwabe, Panasonic, Black	Contact sales for other heatsink options
NX302122	Heatsink, L100-270, 2xBridgelux Vero 29, Black	Contact sales for other heatsink options
NX302123	Heatsink, L100-270, 3xBridgelux Vero 29, Black	Contact sales for other heatsink options

Nuventix reserves the right to make changes to the products or information contained herein without notice. No liability is assumed as a result of their use or applications. For additional information, please contact Nuventix directly.