Wall Wash Cooler 82W Rectangular Mounting LED Heat Sink

This LED Heatsink is part of the Nuventix scalable LED portfolio.

Future proof – Designed with the rapidly evolving light engine industry in mind, thermal performance can be easily increased or decreased without a luminaire redesign by adding or removing a SynJet Cooler

Flexibility – Configure to order luminaire production process, use heatsinks for low lumen applications and the SynJet Cooler with heatsink for higher lumen versions

Freedom – Compatible with most major light engines so thermal solutions and mechanical interfaces do not have to be redesigned when changing light engines

Fast – In stock and ready for overnight delivery, worldwide

Specifications

Thermal[1]

Thermal Wattage	Heatsink $\Theta_{s\text{-}a}$[2]	Heat Sink $T_{Rise\ Above\ Ambient}$
24 W	1.2 (°C/W)	30 (°C)
34 W	1.2 (°C/W)	39 (°C)
44 W	1.1 (°C/W)	49 (°C)

Mechanical

Material	6063-T5 Al Extrusion
Finish	Black Anodized
Weight	500g
Regulatory	RoHS

Size (mm)
Length: 144 Width: 112 Height: 47

The chart below summarizes the thermal performance of all rectangular LED heatsink solutions

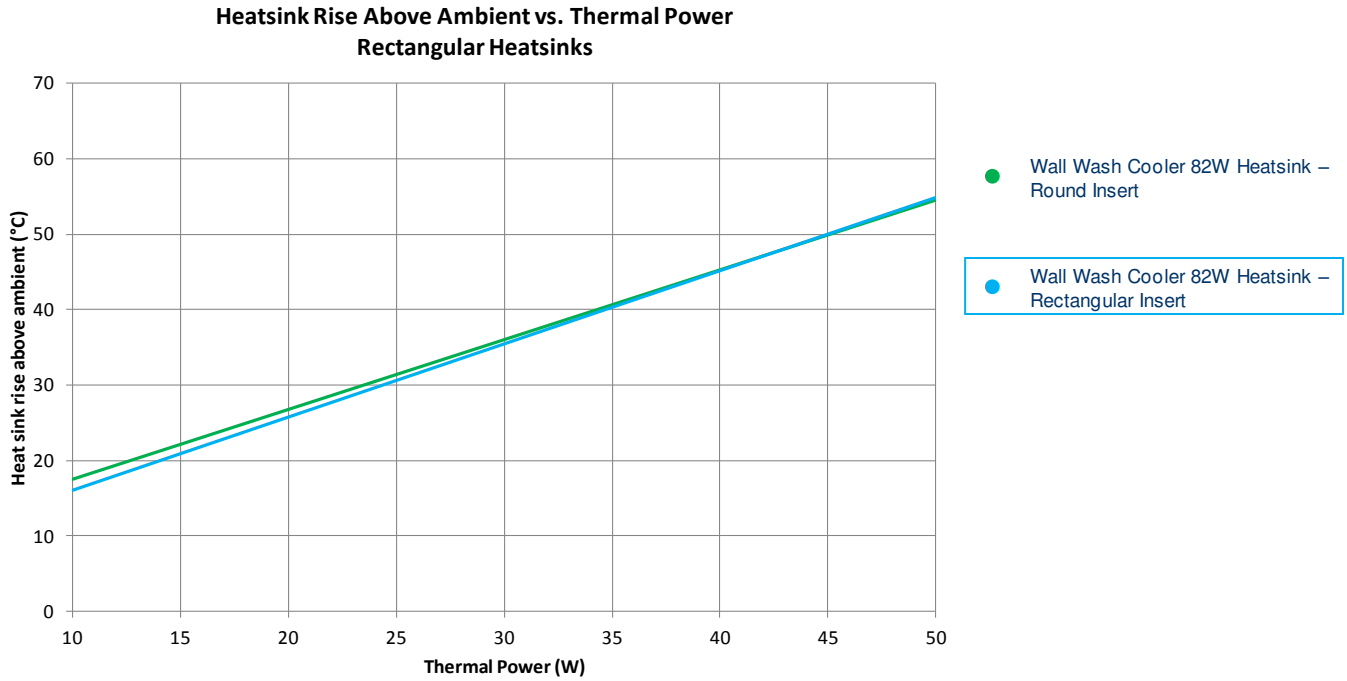

[1] All values are typical at 25ºC unless otherwise stated.
[2] Thermal resistance values are given as reference only and are measured in free air without airflow obstructions. Thermal resistance is measured from the bottom middle of the heat sink to ambient air, with a heat source of 19 cm^2. Actual thermal performance may vary by application and final product design should be tested to assure proper thermal performance.

Mechanical – LED Heatsink shown with Configurable heat sink

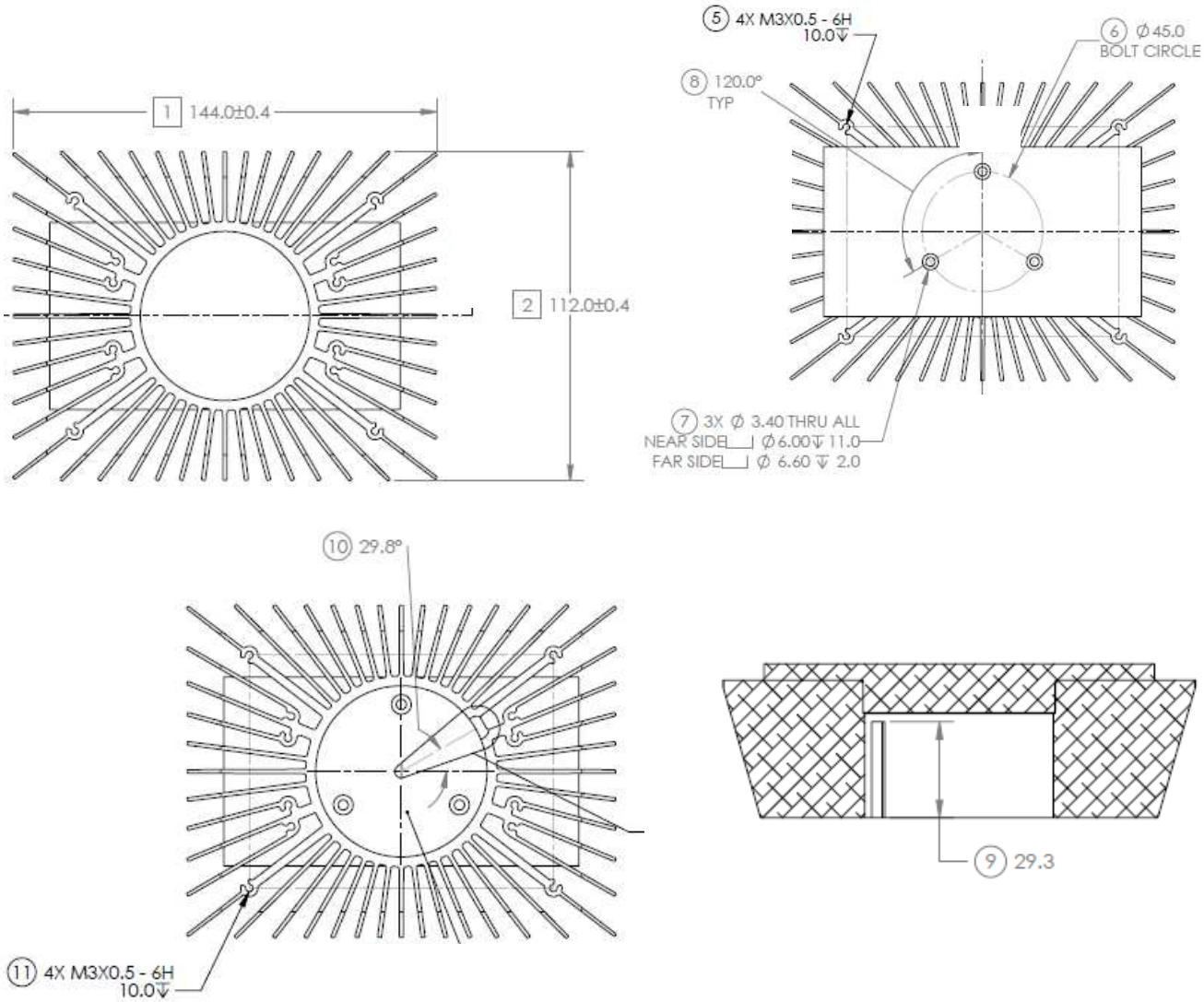

All dimensions are nominal and in mm unless otherwise stated. See product drawings for more detail.

Part Numbers

Part Number	Description	Notes
NX300134	LED Heatsink, 82W, Wall Washer, Configurable, Black, Rectangular Mounting Plate	Contact sales for other heatsink options
NX300146	LED Heatsink, 82W, Wall Washer, Xicato XLM, Black, Rectangular Mounting Plate	Contact sales for other heatsink options

Nuventix reserves the right to make changes to the products or information contained herein without notice. No liability is assumed as a result of their use or applications. For additional information, please contact Nuventix directly.