RoHS COMPLIANT

Description

The X3M is no longer available for purchase.

The **X3M** is an absolute inclinometer utilizing MEMS (micro electro-mechanical systems) technology to sense tilt angles over a full 360 ° range in the pitch and roll axes. The **X3M** incorporates a number of breakthroughs to create a new type of inclinometer that is rugged, compact, fast, flexible and easy to use.

The **X3M** is a very flexible device, allowing the user to implement the RS232 serial interface, the six programmable outputs or both. The RS232 interface provides the most efficient way to read and write all angles and parameters. The six programmable outputs on J1 allow the **X3M** inclinometer to emulate a tilt switch, an quadrature encoder, or a PWM (pulse width modulation) inclination sensor. When emulating an encoder, the **X3M** outputs quadrature signals (A, B, and index) as a standard 1 or 2 axis incremental encoder. The **X3M** can also be configured to operate as a 1 or 2 axis precision tilt switch.

The **X3M** calculates tilt angle (inclination) by sensing the acceleration from MEMS accelerometers integrated into a monolithic chip. Gravity, centrifugal forces, and linear speed changes are all forms of acceleration. The **X3M** will report the mathematically calculated tilt angle based on all sensed acceleration(s). Note that regardless of mounting orientation, the **X3M** will report valid pitch and roll angles relative to gravity.

Configurations and parameters are stored in non-volatile memory. Parameters include operating modes, orientation, zero position, quadrature resolution, tilt switch thresholds, damping / averaging time, direction and more. The **X3M** can be ordered with default parameters or with preconfigured customer defined parameters.

Knowledge of the serial protocol is only needed when interfacing the **X3M** to a PLC or microcontroller using the serial link. To develop an application that runs on a PC, US Digital provides a DLL that adds the function calls which run under Windows.

Typical applications include heavy construction equipment, dredging machinery, mining equipment, solar farms and warehouse automation.

Features

- Full 360 ° range in pitch & roll axes
- MEMS technology
- -40 C to +85 C
- Temperature compensated
- Field configurable
- Serial (RS232) interface
- Six configurable outputs as quadrature, tilt, PWM and manual
- Absolute Quadrature up to 9000 CPR
- Reports temperature

Software

- www.usdigital.com/support/software/x3-demo-software
- www.usdigital.com/assets/USDProducts.zip (.zip file with installer)

Mechanical Drawing

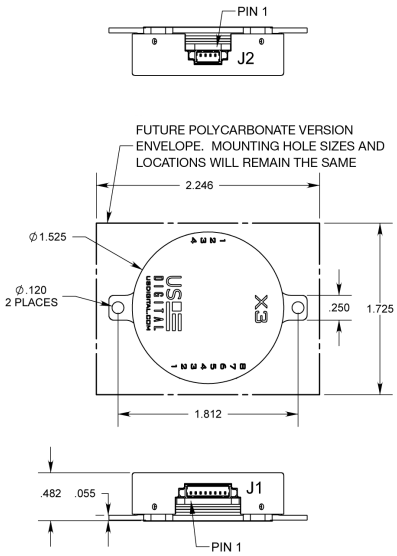

Recommended Operating Conditions

Parameter	Min.	Typ.	Max.	Units
Supply Voltage	3.85	5	15	V
Supply Current	-	30	50	mA
Voltage of J1 Open Drain Outputs	-0.3	5	16	V
Current of J1 Open Drain Outputs (continuous)	-	-	500	mA
On-Resistance of J1 Open Drain Outputs	-	-	0.35	Ω
Source Current of J1 Open Drain Outputs	-	-	1.5	mA
Operating Temperature	-40	25	85	C
Acceleration	-	-	3000G for 0.5 milliseconds 10000G for 0.1 milliseconds	

- J1 open drain outputs have onboard 3.3K pull-up resistors connected to the supply voltage.

Accuracy Specifications

US Digital calibrates the desired number of axes by generating and downloading error correction tables into the nonvolatile memory of each X3. All X3s will report the position of all 3 axes, whether calibrated or not. The number of calibrated axes are specified when ordering; unless otherwise noted, accuracy specifications apply only to calibrated axes. The accuracy of uncalibrated axes is not specified, but is typically within several degrees. Angular accuracy is specified "on-axis". For example, if Axis 2 is being measured, Axis 0 and 1 are considered "off-axis" and must be within ±5 degrees of 0 degrees to achieve the rated accuracy on Axis 2. The X3 uses an i ntegrated temperature sensor and temperature compensation tables to provide accuracy that is typically well beyond the stated

temperature compensated temperature range. The serial interface reports angles with 0.001 ° resolution.

- Damping @ 500ms unless otherwise specified.
- Angular error is worst case, based on 95% confidence level accelerated aging testing.
- The X3 uses a digital temperature sensor for temperature compensation. It will report a few degrees above ambient due the power dissipation of the X3.

Parameter	Max.	Units	Test Conditions
Axis 0/1 Angular Error - within 1 year of calibration	±1.2	Angular Degrees	0 ° C to 50 ° C, on-axis ±5 °
Axis 0/1 Angular Error - life of product	±1.5	Angular Degrees	0 ° C to 50 ° C, on-axis ±5 °
Axis 2 Angular Error - within 1 year of calibration	±0.4	Angular Degrees	0 ° C to 50 ° C, on-axis ±5 °
Axis 2 Angular Error - life of product	±0.6	Angular Degrees	0 ° C to 50 ° C, on-axis ±5 °

Mechanical Specifications

Parameter	Specification
Case Material	Black anodized 6061-T6 aluminum
Weight	0.72 oz.

Axis Orientation

Single Axis Version (Axis 2 is calibrated)

Two Axis Version (Axis 0 and Axis 1 are calibrated)

Three Axis Version (All three axes are calibrated)

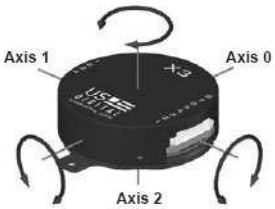

Note: In the above orientation, with Axis 2 parallel to gravity, Axis 0/Axis 1 will give the pitch/roll angles and Axis 2 will be invalid. If the **X3M** is mounted so Axis 0 is parallel to gravity, then Axis 1/Axis 2 will show the pitch/roll angles and Axis 0 will be invalid.

Noise Filtering and Damping

The X3 uses a FIR (Finite Impulse Response) digital filter to provide electronic damping of the angle readings. The digital filter's impulse response has a triangular weighting that decays linearly to zero. The damping time is user programmable from 2 milliseconds to 5000 milliseconds. Increasing the damping time will average more samples together to form the reported angle. This will reduce noise in the output but increase the response time. Graphs A and B show the X3's angular output with a 90 degree step change in position for 1 second and 5 second damping times. Graph C shows how the peak-to-peak noise in the reported angle is reduced with increasing damping times.

The number of samples averaged per reported position can be calculated by dividing the damping time in milliseconds by 1.5625 milliseconds. Example: When the damping is set to 125 milliseconds, each reported position will be the average of the previous 80 samples. A 250 millisecond damping time will average the previous 160 samples, etc.

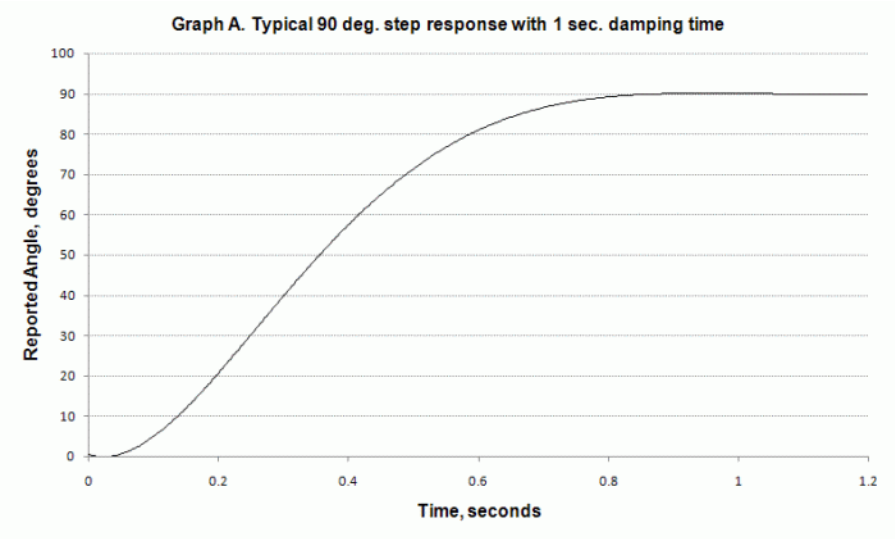
Graph A. Typical 90 deg. step response with 1 sec. damping time
Reported Angle, degrees
100
90
80
70
60
50
40
30
20
10
0
0
0.2
0.4
0.6
0.8
1
1.2
Time, seconds

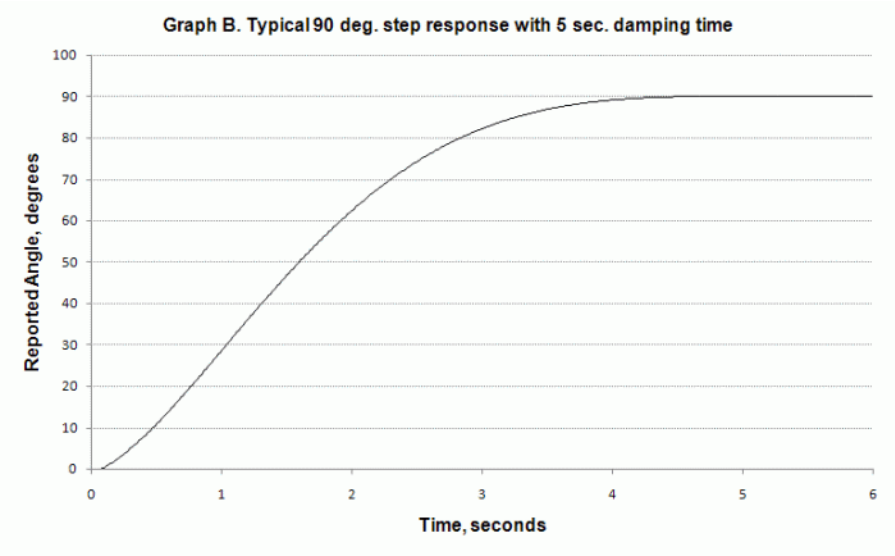
Graph B. Typical 90 deg. step response with 5 sec. damping time
Reported Angle, degrees
100
90
80
70
60
50
40
30
20
10
0
0
1
2
3
4
5
6
Time, seconds

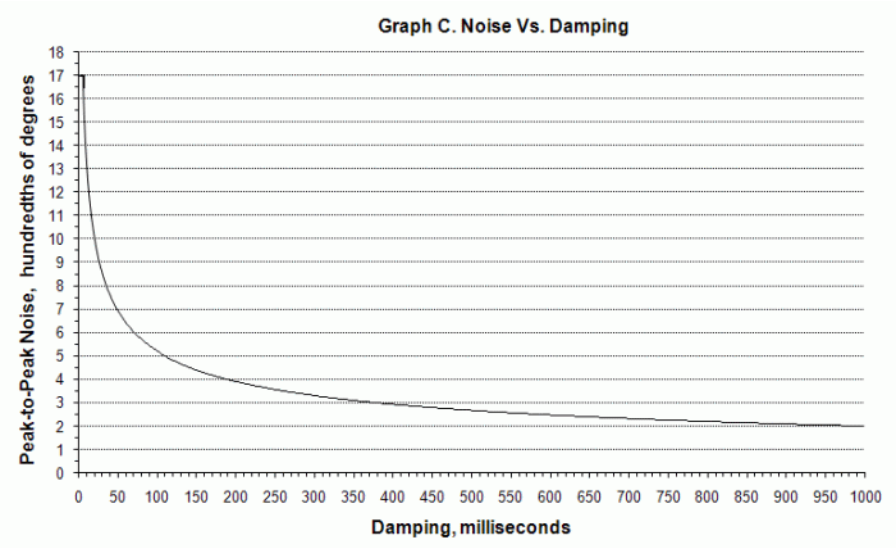

Interfacing with a PC

Configuring The X3

Users are encouraged to order the CA-DB9P-SH-MIC4 with PS-12 power supply or the USB-232 interface and cable. The X3 PC configuration/demo software can then used to get familiar with the X3 and gain experience with the behavior of the X3 in real-time as it is moved and parameters are changed. Once the desired parameters are set, they can be saved in a PC user file and used to configure additional X3s.

Typical Computer Interface Examples:

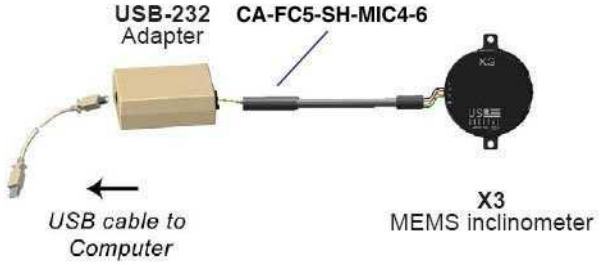

J1 Pin-out (8-pin)

J1 is the male programmable output connector.

Female mating connector cables are sold separately.

CA-MIC8-W8-NC-1: 8 Pin Micro with Eight Discrete Wires Flying Lead

CA-MIC8-SH-NC-6: 8 Pin Micro with Shielded 8 Wire Cable Flying Lead

The 6 signal pins are divided into two groups of 3 pins each. Each group can be independently set to manual, quadrature, tilt switch, or PWM mode for any of the 3 axes.

J1 Pin	Group	Manual Output	Quadrature	Tilt Switch	PWM
1	GND				
2	+VIN (3.85 to 15V)				
3	0	Output 0	A Quadrature	TooLow	0
4	0	Output 1	B Quadrature	MinMaxLatch	PWM
5	0	Output 2	Index	TooHigh	0
6	1	Output 3	A Quadrature	TooLow	PWM
7	1	Output 4	B Quadrature	MinMaxLatch	0
8	1	Output 5	Index	TooHigh	0

Each output bit has an open drain MOSFET with a 3.3K Ohm pull-up resistor to the supply voltage (VIN). The user may safely pull up the output to a higher voltage (up to 16V) if desired, When an output is asserted, the LED is on, the MOSFET is on (switches the output to GND), and the output voltage is near zero. When an output is de-asserted, the LED is off, the MOSFET is off, and the output voltage is pulled up to VIN.

The output driver of each J1 pin is shown below:

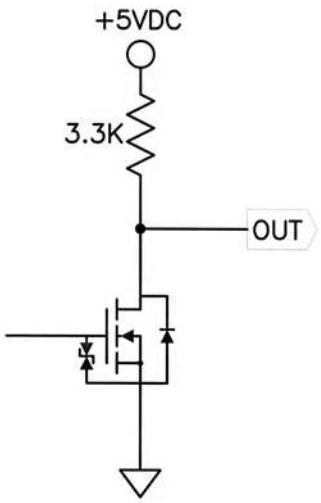

J2 Pin-out (4-pin)

J2 is a male connector. Female mating connector cables are sold separately (US Digital part number CA-MIC4-SH-NC-6).

Pin	Description
1	+VIN, 3.85Vdc to 15Vdc (internally connected to J1-Pin2)
2	TXD: Transmitted data to host (RS232 levels swing between -5 and +5 volts)
3	GND (Note: GND is not connected to the case)
4	RXD: Received data from host

Absolute Quadrature

Quadrature Configuration

When the X3 is configured to emulate a 1 or 2 axis incrementral encoder, the X3 will report the inclination angles by outputting A, B, a nd Index quadrature signals via the 8-pin J1 connector. Full access to the 4-pin J2 serial bus is continuously available even while the X3 outputs quadrature signals on J1. The Index output is asserted (pulled high) at the zero angle position. The zero angle position can be set to any orientation. These outputs can then be directly connected to any device designed to accept quadrature signals such as a US Digital ED3 display, PCI-3E, or USB4 data acquisition module.

Conveying Absolute Position with Quadrature Burst

Quadrature outputs provide incremental position updates. In order for a quadrature counter to show absolute position, it needs to be zeroed and the correct number of quadrature states sent so that the quadrature count agrees with the current absolute angle measured by the X3.

The X3 can initialize an external quadrature counter on power up so that absolute position can be measured using the quadrature outputs as follows.

Upon power up, the X3 sets the A and B output voltages low and the index output high until after a programmable startup delay time

expires. An external device may take some time after power up before it is ready to accept quadrature signals. The startup delay is programmable from 2 milliseconds to 102 seconds in 1.5625 millisecond increments (default is 500 milliseconds). After this time, the X3 cycles the index output to insure that the external quadrature counter is reset, then sends the necessary number of quadrature pulses to increment or decrement the external quadrature position counter to the absolute position. See the startup timing diagram below. The X3 will then begin sending quadrature pulses as necessary to follow real-time angle changes so that the counter always corresponds to the current absolute angle. The X3 will choose the most efficient direction, whichever direction is faster. The worst case time to send the absolute position is determined by the resolution and the selected quadrature rate. If the quadrature rate is set to maximum and resolution is set to the maximum of 9000 CPR (36000 positions per revolution), then 18000 quadrature states will be sent if the starting angle happens to be at 180 deg. Since the average quadrature update rate is 6900 states per second, this will take about 2.6 seconds. The X3 always keeps track of how many quadrature states it has sent and makes sure that even if the angle changes rapidly, the correct number of quadrature pulses are sent so that the counter eventually catches up to the absolute angle.

Quadrature Startup Timing Diagram

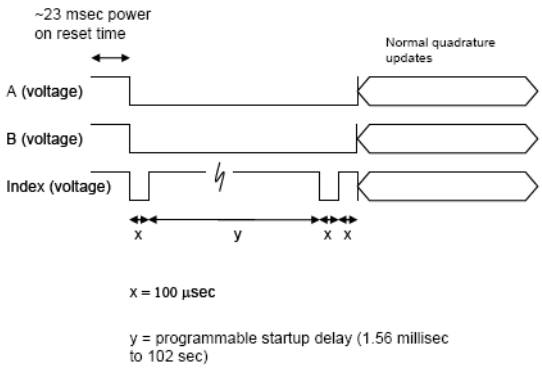

Quadrature Generation Details

The quadrature resolution may be set to any value from 1 to 9000 CPR (cycles per revolution) corresponding to 4 to 36000 positions per revolution. When the resolution is set to 9000 CPR, one quadrature state change on the A/B outputs corresponds to 0.01 degree. The X3 calculates the absolute position at a 640 Hz rate and updates the A/B signals in bursts of pulses at an average rate of approximately 6900 quadrature states per second. If desired, this rate may be set to a slower value (as low as 770 states per second) to allow time for an external microcontroller to decode the quadrature signals in software. If the X3 moves to a new position faster than the quadrature outputs can update, the X3 keeps track of the difference and sends the correct number of quadrature signals so that the incremental position eventually matches the final absolute position.

The index (I) signal will be asserted high and stay high for as long as the axis is at the zero position and the A/B outputs are low. This provides a clean index pulse that spans one quadrature state. If the position sweeps past zero, then the index will be asserted at zero position and then de-asserted as that axis leaves the zero position. This index signal can be used to reset an external position counter that stores the position. The external position counter can be reset by the index output each time that axis is at zero position and after power up as described below. When set to the maximum quadrature speed, the maximum reportable rate of rotation in degrees per second is calculated approximately as follows: MaxDegreesPerSec = 614100 / CPR (where CPR is the resolution in full cycles per rev.) Examples: 9000 CPR = 68 Deg/Sec, 1000 CPR = 614 Deg/Sec. A plot of this is shown in the graph below:

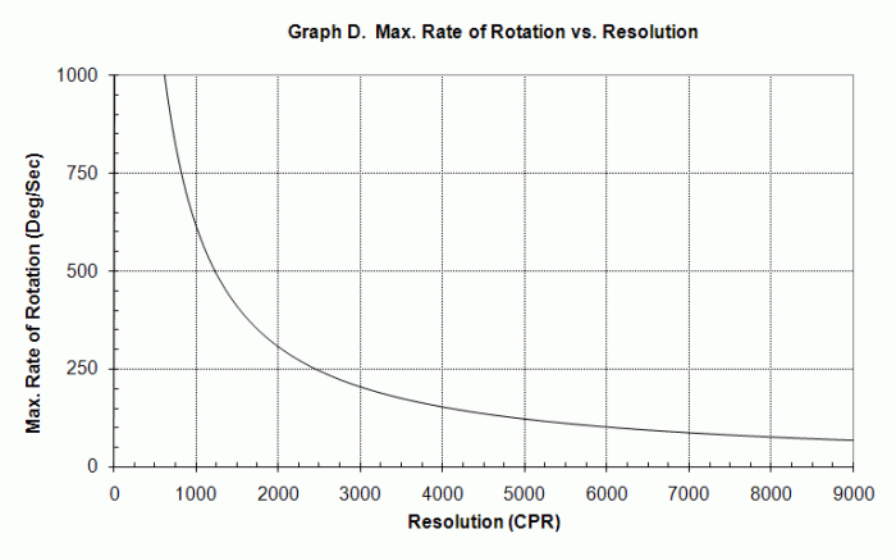

Phase Relationship

Negative Rotation (B leads A):

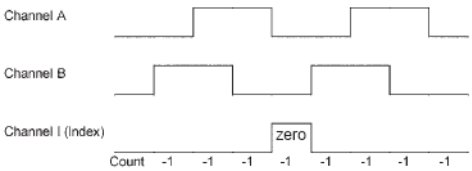

Positive Rotation (A Leads B):

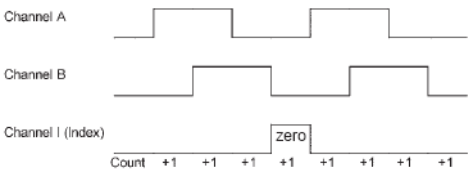

PWM Configuration

In PWM mode, the X3 will output a PWM signal corresponding to the measured angle for a specified axis. The PWM frequency is user programmable. The duty cycle ranges from 12.5% (-180.00 deg) to 87.5% (+ 179.99 deg). 50% duty corresponds to 0 deg. There are 36000 possible duty cycle values from 12.5% to 87.5%, the PWM resolution is 0.01 deg.

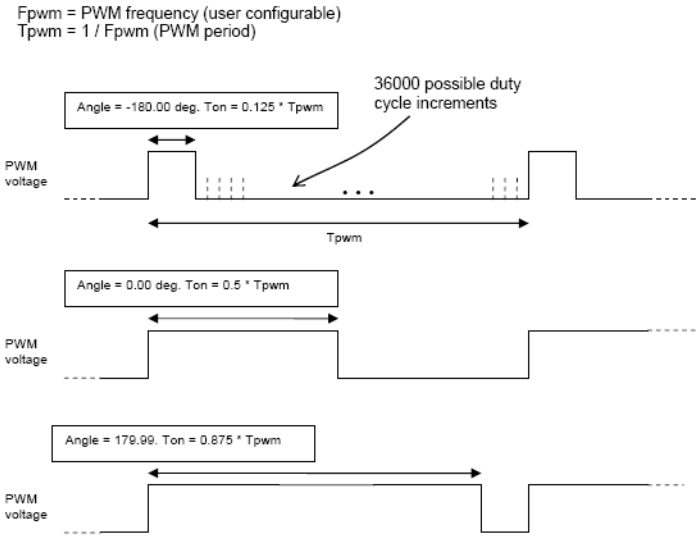

Tilt Switch Configuration

Each X3 output group (Group 0/1) of the 8-pin connector (J1) can be configured as a tilt switch. Note that both output Groups do not have to be set to the same output mode. For example, Group 0 can be a tilt switch for axis 0 while Group 1 can be configured as a quadrature output for axis 1. It is also possible to have Group 0 and Group 1 set to the same axis but with different angles thresholds. The TooHigh and TooLow outputs are not latched, they respond to the current angle. The MinMaxLatch output reflects the status of a level triggered flipflop. If the current angle is > Limit2, that latch is set. Angles < Limit1 will reset that latch. This provides hysteresis and a bounce-free output that can be used in sump pump, auto-fill, or other applications. Since the outputs are open collector (with pullups), the TooHigh and TooLow outputs may be connected together to form a single logical output that will then indicate if the current angle is within the two limits.

To understand how the tilt switch works, refer to the diagrams and text below:

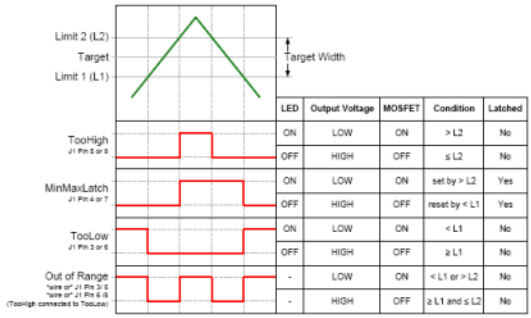

LED	Output Voltage	MOSFET	Condition	Latched
ON	LOW	ON	> L2	No
OFF	HIGH	OFF	≤ L2	No
ON	LOW	ON	set by > L2	Yes
OFF	HIGH	OFF	reset by < L1	Yes
ON	LOW	ON	< L1	No
OFF	HIGH	OFF	≥ L1	No
-	LOW	ON	< L1 or > L2	No
-	HIGH	OFF	≥ L1 and ≤ L2	No

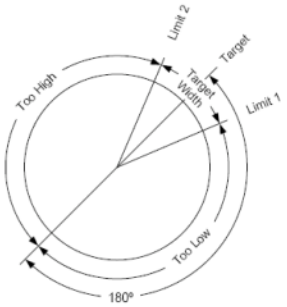

The tilt switch uses 2 settings for each Group: Target Angle and Target Width. Both angles are in increments of .001 degrees and in the range -180.000 to +179.999. The target width is the full width angle. The behavior of each output is shown in the adjacent table where:

Limit2 = Target + TargetWidth /2

Limit1 = Target - TargetWidth /2

Consider an example where the Target angle = 45 deg and the Target Width = 10 deg. This means that Limit2 = 45 deg + 5 deg = 50 deg and Limit1 = 45 deg - 5 deg. = 40 deg. As the X3 is rotated, the TooLow MOSFET will turn ON (0V output) when the current angle i s < 40 deg. The TooHigh MOSFET will turn ON (0V output) when the current angle is > 50 deg. The MinMaxLatch MOSFET will turn ON (0V output) if the current angle is > 50 deg. It will remain ON until the current angle is < 40 deg. The MinMaxLatch MOSFET will turn OFF if the current angle is < 40 deg. It will remain OFF until the current angle is > 50 deg. Notice that these outputs will also flip if the angle moves to 180 degrees from the target angle.

Output Pin	Behavior of Output MOSFET
TooHigh	= ON (0V output) if Current Angle is > Limit2 =OFF otherwise
TooLow	= ON (0V output) if Current Angle is < Limit1 = OFF otherwise
MinMaxLatch	= ON (0V output) if Current Angle is > Limit2. "MinMaxLatch" will remain ON until Current Angle < Limit1. = OFF if Current Angle is < Limit1. "MinMaxLatch" will remain OFF until Current Angle > Limit2.

Manual Output Configuration

In this mode, the user can send serial commands to use J1 as a general purpose output port. In this mode, a logical 1 asserts the output so the LED is on, the MOSFET is on (switches the output to GND), and the output voltage is virtually zero. A logical 0 de-asserts the output so the LED is off, the MOSFET is off, and the output voltage is pulled up.

Default Configuration

All **X3M** units ship from US Digital with a default configuration. The specifications are shown below. However, in larger quantities, sp ecial orders may be placed where the units can be preconfigured with any of the available settings noted in the **X3 RS232 Serial Communication User Guide**. Please contact customer service for pricing and turnaround time.

Default Configuration:

- Angle output range are set to +/-180 (-179.99 to 179.99)
- Counting Direction are set to forward on all 3 axes
- Angle Offsets are set to 0 on all 3 axes
- Damping is set to 500 ms
- The six output bits are set to generate quadrature and index pulses (A,B,I)
  - Axis 0 A, B & I signals are mapped to output bits 0, 1 & 2
  - Axis 1 A, B & I signals are mapped to output bits 3, 4 & 5
- CPR = 9000

Ordering Information

X3M - [ ]

Number of Calibrated Axes

3 =

Notes

- Cables and connectors are not included and must be ordered separately.
- For ordering information please see the Compatible Cables / Connectors section above.
- US Digital warrants its products against defects in materials and workmanship for two years. See complete warranty for details.

Base Pricing

Quantity	Price
1	$245.70
10	$192.78

For volume discounts, please contact us at sales@usdigital.com or 800.736.0194.

- Add 26% per unit for **Number of Calibrated Axes** of