Texas Photonics, Inc.

TXPI 1315
472 nm Light Emitting Diode

DESCRIPTION

This is a high radiance 472 nm Blue LED optimized for applications requiring high Radiant intensity and sunlight visibility.

FEATURES

- ❒ 472 nm Blue
- ❒ High Radiant Flux, 20 mW typical
- ❒ High Reliability
- ❒ Hermetic Package
- ❒ 12 Degree Half angle of light emission
- ❒ Available screened to MIL-PRF-19500

ABSOLUTE MAXIMUM RATINGS

- ❒ Storage temperature..... -65°C to +125°C
- ❒ Case operating temperature -55°C to +100°C
- ❒ Lead solder temperature..... 260°C, 10 seconds
- ❒ Continuous forward current.. 50 mA
- ❒ Peak Forward Current..... 100 mA \1
- ❒ Reverse Voltage..... 5 Volts

\1 100µsec pulse width, 1 kHz

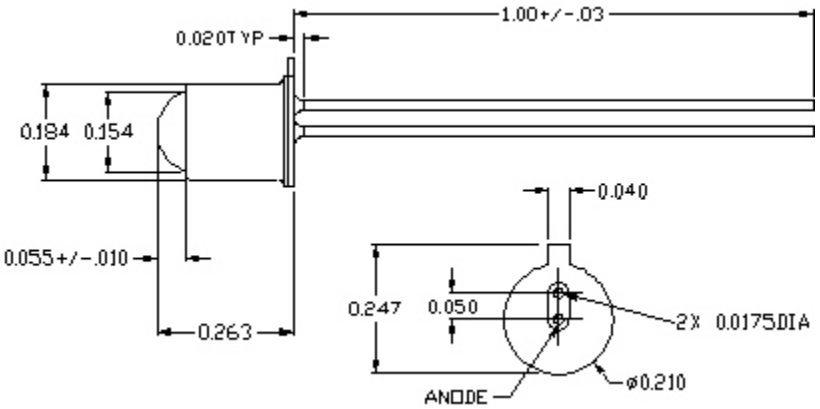

OUTLINE DIMENSIONS

Tolerances are +/-0.005 inches, except as noted

Pinout

1. Anode 2. Cathode

The case is electrically isolated from the pins.

ELECTRO-OPTICAL CHARACTERISTICS (Case T = 25°C)

PARAMETER	TEST CONDITION	SYMBOL	MIN	TYP	MAX	UNIT
Forward Voltage	If = 20 mA	V_f	2.7	3.2	3.7	Volts
Reverse Current	Vr = 5V	Ir			2.0	µA
Half Angle at Half Power		$\theta_{1/2}$		12		DEG
Radiant Flux	If = 20 mA, 0 degrees		15	20		mW
Peak Wavelength	If = 20 mA	λ_p	465	472	475	nm

3213 Main Street, Rowlett, Texas, 75088 (972) 412-7111 tel/(972) 412-5440 fax