±6 Gauss, Low Noise 2-axis Magnetic Sensor

MMC246xMT

FEATURES

- **Fully integrated 2-axis magnetic sensor and electronic circuits requiring fewer external components**
- **Superior Dynamic Range and Accuracy:**
  - ✓ **±6 G FSR with 16/14 bit operation**
  - ✓ **0.25 mG per LSB resolution**
  - ✓ **0.8 mG total RMS noise**
  - ✓ **Enables heading accuracy <1º**
- **Wide operating Voltage (1.62 V ~ 3.6 V)**
  - ✓ **Single 1.8 V supply capable**
  - ✓ **1.8 V I/O compatibility.**
- **Low power consumption (50 µA @ 7Hz)**
- **20 nA power down current function**
- **SET/RESET Function**
  - ✓ **Allows for elimination of temperature variation induced offset error (Null Field output)**
  - ✓ **Clears the sensors of residual magnetization resulting from exposure to strong external fields**
- **On-chip sensitivity temperature compensation**
- **I^2C Slave, FAST (≤400 KHz) mode**
- **Low Profile package 2 x 2 x 1 mm**
- **RoHS compliant**

APPLICATIONS

Electronic Compassing
GPS Navigation Assist
Magnetic Field Measurement

DESCRIPTION

The MMC246xMT is a complete 2-axis magnetic sensor with on-chip signal processing and integrated I^2C bus. The device can be connected directly to a microprocessor, eliminating the need for A/D converters or timing resources. It can measure magnetic fields within the full scale range of ±6 G (gauss), with 0.25 mG per LSB resolution in 16 bit operation mode and 0.8 mG total RMS noise, enabling heading accuracies of <1° in electronic compass applications.

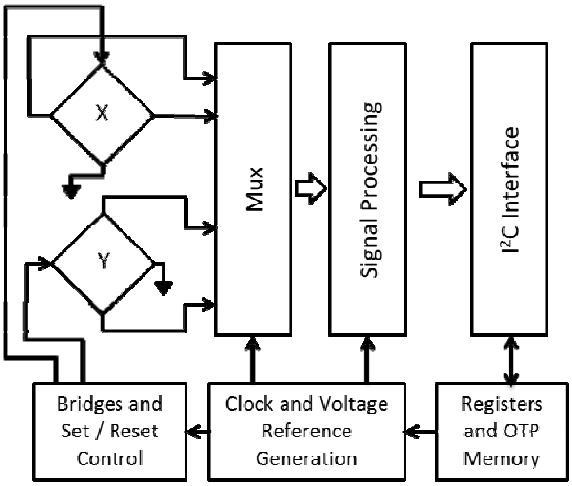

FUNCTIONAL BLOCK DIAGRAM

Contact MEMSIC for access to advanced calibration and tilt-compensation algorithms.

An integrated SET/RESET function provides for the elimination of error due to Null Field output change with temperature. In addition it clears the sensors of any residual magnetic polarization resulting from exposure to strong external magnets. The SET/RESET function can be performed for each measurement or periodically as the specific application requires.

The MMC246xMT is packaged in an ultra-small low profile LGA package (2 x 2 x 1 mm) and operates over a temperature range from -40 to 85 °C.

The MMC246xMT provides an I^2C digital output with 400 KHz, fast mode operation.

Information furnished by MEMSIC is believed to be accurate and reliable. However, no responsibility is assumed by MEMSIC for its use, or for any infringements of patents or other rights of third parties which may result from its use. No license is granted by implication or otherwise under any patent or patent rights of MEMSIC.

©MEMSIC, Inc.
One Technology Drive, Suite 325, Andover, MA01810, USA
Tel: +1 978 738 0900 Fax: +1 978 738 0196
www.memsic.com

SPECIFICATIONS: (Measurements at 25 °C, unless otherwise noted; V_{DA} = V_{DD}= 1.8 V unless otherwise specified)

Parameter	Conditions	Min	Typ	Max	Units
Field Range (each axis)	Total applied field	±6			gauss
Supply Voltage	V_{DA}	1.62[1]	1.8	3.6	V
	V_{DD} (I^2C interface)	1.62[1]	1.8	3.6	V
Supply Voltage rising time				5.0	mS
Supply Current[2] (7measurements/second)	BW[1:0]=00, 16bit mode		50		µA
	BW[1:0]=01, 16bit mode		25		µA
	BW[1:0]=10, 14bit mode		20		µA
Power Down Current[3]			20	50	nA
Operating Temperature		-40		85	°C
Storage Temperature		-55		125	°C
Linearity Error (Least Squares Line)	$H_{applied}$ ±6 gauss $H_{applied}$ ±4 gauss		0.25 0.15		%FS
Hysteresis	±6 gauss		0.1		%FS
Repeatability Error	±6 gauss		0.25		%FS
Alignment Error			±0.5	±1.0	degrees
Transverse Sensitivity			±0.2	±1.0	%
Total RMS Noise	BW[1:0]=00, 16 bit mode		0.8		mG
	BW[1:0]=01, 16 bit mode		1.0		mG
	BW[1:0]=10, 14 bit mode		2.5		mG
Output resolution			16/14		bits
Heading accuracy[4]			±0.5	±1.0	degrees
Sensitivity	±6 gauss	-3		+3	%
	14 bit mode		1024		counts/G
	16 bit mode		4096		counts/G
Initial sensitivity matching (X to Y)			±1		%
Sensitivity Change over Temperature	-40 ~ 85 °C ±6 gauss	-5		+5	%
Sensitivity Change over Temperature Matching (X to Y)			±1		%
Null Field Output	±6 gauss	-0.2		+0.2	G
	14 bit mode		8192		counts
	16 bit mode		32768		counts
Null Field Output Change over Temperature[5]	Delta from 25°C		±30		mG
Null Field Accuracy over temperature using SET/RESET	-40 to 85C		±2		mG
Disturbing Field		8			G
Maximum Exposed Field				10000	G

[1] 1.62 V is the minimum operation voltage. Both V_{DA} and V_{DD} should be equal to or greater than 1.62 V
[2] Supply current is proportional to the number of measurements performed per second.
[3] See Supplemental Performance Characteristics for typical current change over temperature
[4] Noise, resolution and accuracy specifications enable a typical heading accuracy calculation of 0.5 degrees. Actual heading accuracy depends upon user system design and algorithms.
[5] This error can be eliminated by using SET and RESET to determine the actual null field output at any temperature from -40 to 85 ℃

SUPPLEMENTAL PERFORMANCE CHARACTERISITCS (Vdd = 1.8 V)

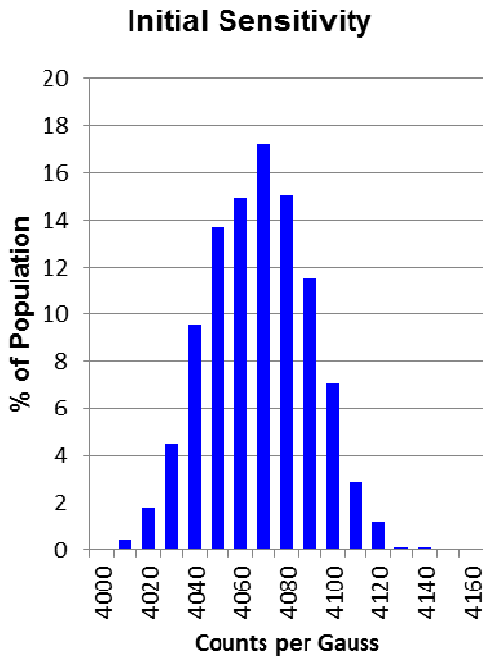

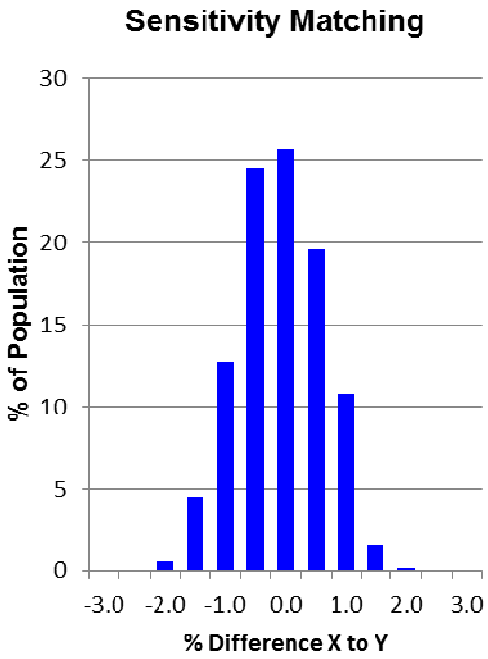

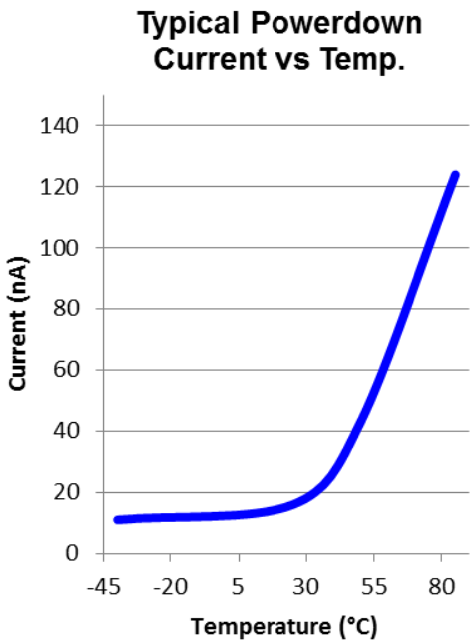

I²C INTERFACE I/O CHARACTERISTICS (VDD = 1.8 V)

Parameter	Symbol	Test Condition	Min.	Typ.	Max.	Unit
Logic Input Low Level	V_{IL}		-0.5		0.3* V_{DD}	V
Logic Input High Level	V_{IH}		0.7*V_{DD}		V_{DD}	V
Hysteresis of Schmitt input	V_{hys}		0.2			V
Logic Output Low Level	V_{OL}				0.4	V
Input Leakage Current	I_i	$0.1V_{DD}<V_{in}<0.9V_{DD}$	-10		10	µA
SCL Clock Frequency	f_{SCL}		0		400	kHz
START Hold Time	$t_{HD;STA}$		0.6			µS
START Setup Time	$t_{SU;STA}$		0.6			µS
LOW period of SCL	t_{LOW}		1.3			µS
HIGH period of SCL	t_{HIGH}		0.6			µS
Data Hold Time	$t_{HD;DAT}$		0		0.9	µS
Data Setup Time	$t_{SU;DAT}$		0.1			µS
Rise Time	t_r	From V_{IL} to V_{IH}			0.3	µS
Fall Time	t_f	From V_{IH} to V_{IL}			0.3	µS
Bus Free Time Between STOP and START	t_{BUF}		1.3			µS
STOP Setup Time	$t_{SU;STO}$		0.6			µS

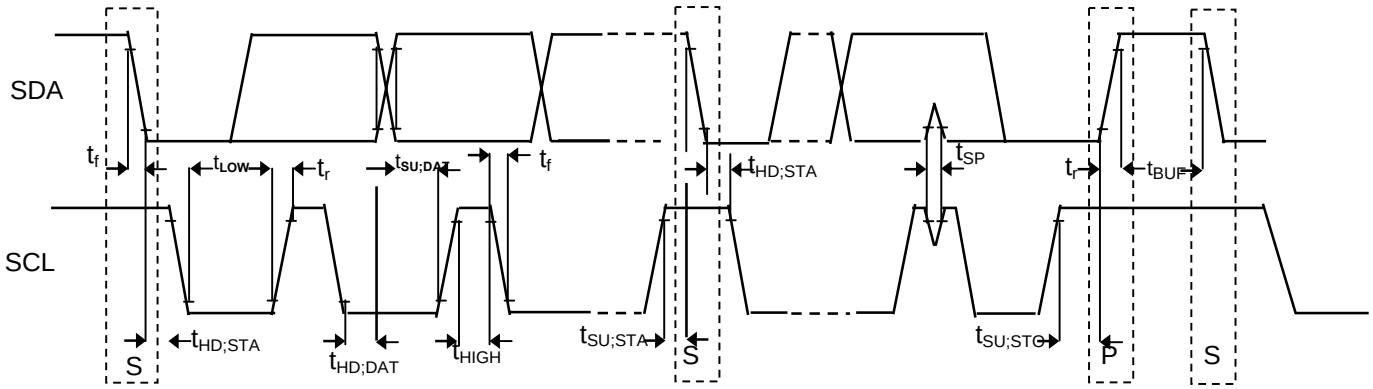

Timing Definition

ABSOLUTE MAXIMUM RATINGS*

Supply Voltage (V_{DD}) ……..-0.5 to +3.6 V
Storage Temperature ……-55 to +125 °C
Maximum Exposed Field ……..10000 Gauss

*Stresses above those listed under Absolute Maximum Ratings may cause permanent damage to the device. This is a stress rating only; the functional operation of the device at these or any other conditions above those indicated in the operational sections of this specification is not implied. Exposure to absolute maximum rating conditions for extended periods may affect the device's reliability.

PIN DESCRIPTIONS: LGA Package

Pin	Name	Description	I/O
1	VDA	Power Supply	P
2	Vpp	Factory Use Only, Leave Open	NC
3	TEST	Factory Use Only, Leave Open/No Connection	NC
4	C+	Short together	I
5	C-		I
6	CAP	Connect to External Capacitor	I
7	SCL	Serial Clock Line for I^2C bus	I
8	VDD	Power Supply for I^2C bus	P
9	SDA	Serial Data Line for I^2C bus	I/O
10	VSA	Connect to Ground	P

All parts are shipped in tape and reel packaging with 9000 pieces per 13" reel or 3000 pieces per 7" reel.

Caution: ESD (electrostatic discharge) sensitive device.

ORDERING GUIDE:

MMC246xMT

Package type:

Code	Type
T	LGA12 RoHS compliant

Performance Grade:

Code	Performance Grade
M	Temp compensated

Address code: 0~7

Code	7bit I^2C Address
0	0110000b
1	0110001b
2	0110010b
3	0110011b
4	0110100b
5	0110101b
6	0110110b
7	0110111b

Note: I2C Address 0 is available in any quantity. Other I2C addresses are available in minimum order quantities of 3000.

MARKING ILLUSTRATION:

Number 2x	Part number
20	MMC2460MT
21	MMC2461MT
22	MMC2462MT
23	MMC2463MT
24	MMC2464MT
25	MMC2465MT
26	MMC2466MT
27	MMC2467MT

"Number" means the 1st two digits of the 1st line in the marking. The 3rd digit in the 1st line represents Year Code (2 stands for 2012), the 2nd line represents Lot Number. Small circle indicates pin one (1).

THEORY OF OPERATION

The Anisotropic Magneto-Resistive (AMR) sensors are special resistors made of permalloy thin film deposited on a silicon wafer. During manufacturing a strong magnetic field is applied to the film to orient its magnetic domains in the same direction, establishing a magnetization vector. Subsequently, an external magnetic field applied perpendicularly to the sides of the film causes the magnetization to rotate and change angle. This effect causes the film's resistance to vary with the intensity of the applied magnetic field. The MEMSIC AMR sensor is incorporated into a Wheatstone bridge configuration to maximize Signal to Noise ratio. A change in magnetic field produces a proportional change in differential voltage across the Wheatstone bridge.

However, the influence of a strong magnetic field (more than 16 Gauss) in any direction could upset, or flip, the polarity of the film, thus changing the sensor characteristics. A strong restoring magnetic field must be applied momentarily to restore, or set, the sensor characteristics. The MEMSIC magnetic sensor has an on-chip magnetically coupled strap: a SET/RESET strap pulsed with a high current, to provide the restoring magnetic field

PIN DESCRIPTIONS

V_{DA} – This is the supply input for the circuits and the magnetic sensor. The DC voltage must be between 1.62 and 3.6 V. A 1 uF by-pass capacitor is recommended.

V_{SA} – This is the ground pin for the magnetic sensor.

SDA – This pin is the I^2C serial data line, and operates in FAST (400 KHz) mode.

SCL – This pin is the I^2C serial clock line, and operates in FAST (400 KHz) mode.

V_{DD} – This is the power supply input for the I^2C bus, and is 1.8 V compatible. DC voltage must be between 1.62 to 3.6 V. A 1 uF by-pass capacitor is recommended.

TEST – Factory use only. No Connection.

CAP –Connect a 4.7 uF low ESR (typically smaller than 0.2ohm) ceramic capacitor.

Vpp – Factory use only. No Connection

C+, C- –Short together on PCB for normal mode operation.

EXTERNAL CIRCUITRY CONNECTION

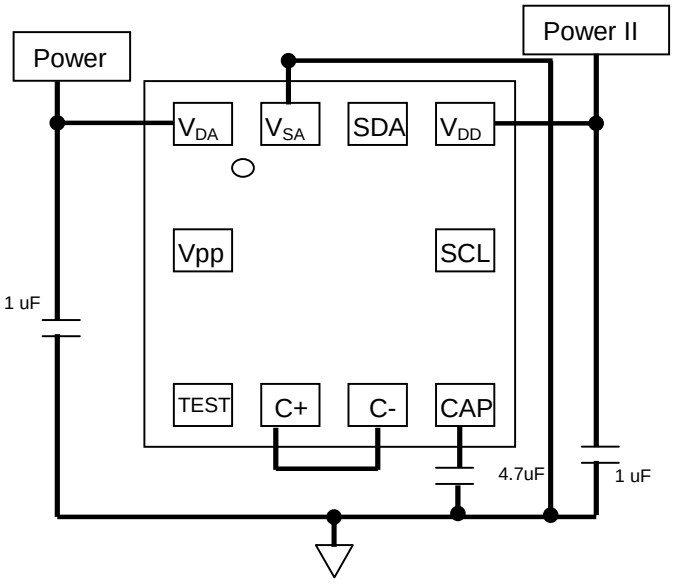

(Top View)

HARDWARE DESIGN CONSIDERATION

- ✓ Provide adequate separation distance to devices that contain permanent magnets or generate magnetic fields (IE speakers, coils, inductors...) The combined magnetic field to be measured and interference magnetic field must be less than the full scale range of the MMC2460xMT (±6 G).
- ✓ Provide adequate separation distance to current carrying traces. Do not route current carrying traces under the sensor or on the other side of the PCB opposite the device.
- ✓ Do not cover the sensor with magnetized material or material that may become magnetized, (IE, shield box, LCD, battery, iron bearing material…).
- ✓ Do not place the device opposite magnetized material or material that may become magnetized located on the other side of the PCB.

Please refer to MEMSIC application note: AN-200-20-0018 (MEMSIC Magnetic Sensor Hardware Design Layout Guideline for Electronic Device).

POWER CONSUMPTION

The MEMSIC magnetic sensor consumes 50µA (typical) at 1.8 V while making 7 measurements per second. The current is proportional to the number of measurements per second, For example, if only 2 measurements/second are performed, the current will be 50 * 2 / 7=14 µA.

I^2C INTERFACE DESCRIPTION

A slave mode I^2C circuit has been implemented into the MEMSIC magnetic sensor as a standard interface for customer applications. The A/D converter and MCU functionality have been added to the MEMSIC sensor, thereby increasing ease-of-use, and lowering power consumption, footprint and total solution cost.

The I^2C (or Inter IC bus) is an industry standard bi-directional two-wire interface bus. A master I^2C device can operate READ/WRITE controls to an unlimited number of devices by device addressing. The MEMSIC magnetic sensor operates only in a slave mode, i.e. only responding to calls by a master device.

I^2C BUS CHARACTERISTICS

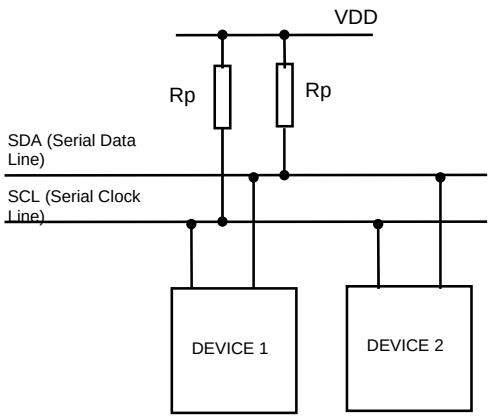

I^2C Bus

The two wires in the I^2C bus are called SDA (serial data line) and SCL (serial clock line). In order for data transfer to start, the bus has to be free, which is

defined by both wires in a HIGH output state. Due to the open-drain/pull-up resistor structure and wired Boolean "AND" operation, any device on the bus can pull lines low and overwrite a HIGH signal. The data on the SDA line has to be stable during the HIGH period of the SCL line. In other words, valid data can only change when the SCL line is LOW.

Note: Rp selection guide: 4.7 kOhm for a short I^2C bus length (less than 4 inches), and 10 kOhm for a bus length less than 2 inches.

REGISTER MAP

Register Name	Address	Description
Xout Low	00H	Xout LSB
Xout High	01H	Xout MSB
Yout Low	02H	Yout LSB
Yout High	03H	Yout MSB
Status	06H	Device status
Internal control 0	07H	Control register 0
Internal control 1	08H	Control register 1
Product ID 0	10H	Product ID
R0	1BH	Factor used register
R1	1CH	Factory used register
R2	1DH	Factory used register
R3	1EH	Factory used register
R4	1FH	Factory used register
Product ID 1	20H	Product ID

Register Details

Xout High, Xout Low

Xout Low	7	6	5	4	3	2	1	0
Addr: 00H	Xout[7:0]							
Reset Value	Xout[7:0]							
Mode	R							

Xout High	7	6	5	4	3	2	1	0
Addr: 01H	Xout[15:8]							
Reset Value	Xout[15:8]							
Mode	R							

X-axis output, unsigned format, the 2LSB of Xout Low will be fixed as "0" at 14bits mode.

Yout High, Yout Low

Yout Low	7	6	5	4	3	2	1	0
Addr: 02H	Yout[7:0]							
Reset Value	Yout[7:0]							
Mode	R							

Yout High	7	6	5	4	3	2	1	0
Addr: 03H	Yout[15:8]							
Reset Value	Yout[15:8]							
Mode	R							

Y-axis output, unsigned format, the 2LSB of Yout Low will be fixed as "0" at 14bits mode.

Status

Device Status	7	6	5	4	3	2	1	0
Addr: 06H	Reserved				ST_XYZ _OK	Rd_Done	Pump On	Meas Done
Reset Value	5'h0					0	0	0
Mode	R							

Bit Name	**Description**
Meas Done	Indicates measurement event is completed. This bit should be checked before reading the output
Pump On	Indicates the charge pump status, after Refill Cap command, the charge pump will start running, and this bit will stays high, it will be reset low after the cap reaches its target voltage and the charge pump is shut off.
Rd_Done	Indicates the chip was able to successfully read its memory.
ST_XYZ_OK	Indicates self-test OK once this bit is "1".

Internal Control 0

Control Register 0	7	6	5	4	3	2	1	0
Addr: 07H	Refill Cap	RESET	SET	No Boost	CM Freq1	CM Freq0	Cont Mode On	TM
Reset Value	0	0	0	0	0	0	0	0
Mode	W	W	W	W	W	W	W	W

Bit Name	Description
TM	Take measurement, set '1' will initiate measurement.
Cont Mode On	When set to a 1 this enables the Continuous Measurement Mode. The chip will periodically take measurements of the magnetic field; the frequency of these measurements is determined by bits CM Freq<1:0>.
CM Freq0 CM Freq1	These bits determine how often the chip will take measurements in Continuous Measurement Mode. CM Freq1 | CM Freq0 | Frequency 0 | 0 | 50Hz 0 | 1 | 25Hz 1 | 0 | 12Hz 1 | 1 | 1.5Hz
No Boost	Setting this bit high will disable the charge pump and cause the storage capacitor to be charged off VDD.
SET	Writing "1" will set the sensor by passing a large current through Set/Reset Coil
RESET	Writing "1" will reset the sensor by passing a large current through Set/Reset Coil at a reversed direction
Refill Cap	Writing "1" will recharge the capacitor at CAP pin, it is requested to be issued before SET/RESET command.

Internal Control 1

Control Register 1	7	6	5	4	3	2	1	0
Addr: 08H	SW_RST	Temp_tst	ST_XYZ	Z-inhibit	Y-inhibit	X-inhibit	BW1	BW0
Reset Value	2'h0		0	0	0	0	0	0
Mode	W	W	W	W	W	W	W	W

Bit Name	Description
BW0 BW1	Output resolution BW1 / BW0 / Output Resolution / Measurement Time 0 / 0 / 16bits / 7.92mS 0 / 1 / 16bits / 4.08mS 1 / 0 / 14bits / 2.16mS 1 / 1 / reserved /
X-inhibit Y-inhibit	Factory-use Register
Z-inhibit	Need to be set to "1"
ST_XYZ	Self-test check, write "1" to this bit and execute a TM command, after TM is completed the result can be read as bit ST_XYZ_OK. Write this bit to 0 to return to normal operation
Temp_tst	Factory-use Register
SW_RST	Writing "1"will cause the part to reset, similar to power-up. It will clear all registers and also re-read OTP as part of its startup routine.

R0, R1, R2, R3, R4

R0	7	6	5	4	3	2	1	0
Addr: 1BH	Factory-use Register							
Reset Value	Factory-use Register							
Mode	R							

R1	7	6	5	4	3	2	1	0
Addr: 1CH	Factory-use Register							
Reset Value	Factory-use Register							
Mode	R							

R2	7	6	5	4	3	2	1	0
Addr: 1DH	Factory-use Register							
Reset Value	Factory-use Register							
Mode	R							

R3	7	6	5	4	3	2	1	0
Addr: 1EH	Factory-use Register							
Reset Value	Factory-use Register							
Mode	R							

R4	7	6	5	4	3	2	1	0
Addr: 1FH	Factory-use Register							
Reset Value	Factory-use Register							
Mode	R							

Product ID 0

Product ID 0	7	6	5	4	3	2	1	0
Addr: 10H	Product ID0[2:0]			Factory-use Register				
Reset Value	X	X	X	Factory-use Register				
Mode	R	R	R	R	R	R	R	R

XXX: I^2C address code.

Product ID 1

Product ID 1	7	6	5	4	3	2	1	0
Addr: 20H	Product ID1[7:0]							
Reset Value	0	0	0	0	0	0	1	0
Mode	R	R	R	R	R	R	R	R

DATA TRANSFER

A data transfer is started with a "START" condition and ended with a "STOP" condition. A "START" condition is defined by a HIGH to LOW transition on the SDA line while SCL line is HIGH. A "STOP" condition is defined by a LOW to HIGH transition on the SDA line while the SCL line is held HIGH. All data transfer in I^2C system are 8-bits long. Each byte has to be followed by an acknowledge bit. Each data transfer involves a total of 9 clock cycles. Data is transferred starting with the most significant bit (MSB).

After a START condition, the master device calls a specific slave device by sending its 7-bit address with the 8th bit indicating that either a READ or WRITE operation will follow, [1] for READ and [0] for WRITE. The MEMSIC device 7-bit device address is **[x110xxx]** where the three LSB's are pre-programmed into the MMC246xMT by the factory and they are indicated on the package as shown in the previous section "Package Marking Illustration". A total of 8 different addresses can be pre-programmed into MEMSIC device by the factory. This variation of I^2C address avoids a potential address conflict, either by ICs from other manufacturers or by other MEMSIC devices on the same bus

The initial addressing of the slave is always followed by the master writing the number of the slave register to be read or written, so this initial addressing always indicates a WRITE operation by sending **[0110xxx]**. After being addressed, the MEMSIC device being called should respond by an "Acknowledge" signal by pulling SDA line LOW. Subsequent communication bytes can either be:

a) the data to be written to the device register, or

b) Another START condition followed by the device address indicating a READ operation **[1110xxx]**, and then the master reads the register data.

Multiple data bytes can be written or read to numerically sequential registers without the need of another START condition. Data transfer is terminated by a STOP condition or another START condition.

Two detailed examples of communicating with the MEMSIC device are listed below for the actions of acquiring a magnetic field measurement and magnetizing the sensor.

POWER STATE

MEMSIC MR Sensor will enter power down mode automatically after data acquisition is finished.

VDA	VDD	Power State
OFF(0 V)	OFF(0 V)	OFF(0V), no power consumption
OFF(0V)	1.62~3.6 V	OFF(0V), power consumption is less than 1uA.
1.62~3.6 V	OFF(0 V)	Power consumption is not predictable, not recommended state.
1.62~3.6 V	1.62~3.6 V	Normal operation mode, device will enter into power down mode automatically after data acquisition is finished

EXAMPLE MEASUREMENT

First cycle: A START condition is established by the Master Device followed by a call to the slave address [0110xxx] with the eighth bit held low to indicate a WRITE request. Note: [xxx] is determined by factory programming and a total of 8 different addresses are available.

Second cycle: After an acknowledge signal is received by the master device (MEMSIC device pulls SDA line low during 9th SCL pulse), the master device sends the address of Control Register 0 or [00000111] as the target register to be written. The MEMSIC device should acknowledge receipt of the address (9th SCL pulse, SCL pulled low).

Third cycle: The Master device writes to the Internal Control Register 0 the code [00000001] (TM high) to initiate data acquisition. The MEMSIC device should send an Acknowledge and internally initiate a

measurement (collect x, y and z data). A STOP condition indicates the end of the write operation.

Fourth cycle: The Master device sends a START command followed by the MEMSIC device's seven bit address, and finally the eighth bit set low to indicate a WRITE. An Acknowledge should be send by the MEMSIC device in response.

Fifth cycle: The Master device sends the MEMSIC device's Status Register [00000110] as the address to read.

Sixth cycle: The Master device sends a START command followed by the MEMSIC device's seven bit address, and finally the eighth bit set high to indicate a

READ. An Acknowledge should be send by the MEMSIC device in response.

Seventh cycle: The Master device cycles the SCL line. This causes the Status Register data to appear on SDA line. Continuously read the Status Register until the Meas Done bit (bit 0) is set to '1'. This indicates that data for the x, y, and z sensors is available to be read.

Eighth cycle: The Master device sends a START command followed by the MEMSIC device's seven bit address, and finally the eighth bit set low to indicate a WRITE. An Acknowledge should be send by the MEMSIC device in response.

Ninth cycle: The Master device sends a [00000000] (Xout LSB register address) as the register address to read.

Tenth cycle: The Master device calls the MEMSIC device's address with a READ (8th SCL cycle SDA line high). An Acknowledge should be send by the MEMSIC device in response.

Eleventh cycle: Master device continues to cycle the SCL line, and each consecutive byte of data from the X, Y and Z registers should appear on the SDA line. The internal memory address pointer automatically moves to the next byte. The Master device acknowledges each. Thus:

Eleventh cycle: LSB of X channel.

Twelfth cycle: MSB of X channel.

Thirteenth cycle: LSB of Y channel.

Fourteenth cycle: MSB of Y channel.

Master ends communications by NOT sending an 'Acknowledge' and also follows with a 'STOP' command.

EXAMPLE OF SET

First cycle: A START condition is established by the Master Device followed by a call to the slave address [0110xxx] with the eighth bit held low to indicate a WRITE request. Note: [xxx] is determined by factory programming and a total of 8 different addresses are available.

Second cycle: After an acknowledge signal is received by the master device (The MEMSIC device pulls the SDA line low during the 9th SCL pulse), the master device sends [00000111] as the target address (Internal Control Register 0). The MEMSIC device should acknowledge receipt of the address (9th SCL pulse).

Third cycle: The Master device writes to the MEMSIC device's Internal Control Register 0 the code [10000000] (Refill Cap) to prepare for SET action.*

A minimum of 50ms wait should be provided to allow the MEMSIC device to finish its preparation for the SET action.

Fourth cycle: The Master device writes to the MEMSIC device's Internal Control 0 register the code [00100000] (SET bit) to initiate a SET action. The MEMSIC device should send an Acknowledge.

EXAMPLE OF RESET*

First cycle: A START condition is established by the Master Device followed by a call to the slave address [0110xxx] with the eighth bit held low to indicate a WRITE request. Note: [xxx] is determined by factory programming and a total of 8 different addresses are available.

Second cycle: After an acknowledge signal is received by the master device (The MEMSIC device pulls the SDA line low during the 9th SCL pulse), the master device sends [00000111] as the target address (Internal Control Register 0). The MEMSIC device should acknowledge receipt of the address (9th SCL pulse).

Third cycle: The Master device writes to the MEMSIC device's Internal Control Register 0 the code [10000000] (Refill Cap) to prepare for RESET action.

A minimum of 50ms wait should be provided to allow the MEMSIC device to finish its preparation for the RESET action.

Fourth cycle: The Master device writes to the MEMSIC device's Internal Control 0 register the code [01000000] (RESET bit) to initiate a RESET action. The MEMSIC device should send an Acknowledge.

At this point, the MEMSIC AMR sensors have been conditioned for optimum performance and data measurements can commence.

Note *: *The RESET action can be skipped for most applications*

USING SET AND RESET TO REMOVE BRIDGE OFFSET

The integrated SET and RESET functions of the MMC246xMT enables the user to remove the error associated with bridge Null Field Output (Offset) change as a function of temperature, thereby enabling more precise heading measurements over a wider temperature than competitive technologies. The SET and RESET functions effectively alternately flip the magnetic sensing polarity of the sensing elements of the device.

The most accurate magnetic field measurements can be obtained by using the protocol described as follows:

1) Perform SET. This sets the internal magnetization of the sensing resistors in the direction of the SET field.
2) Perform MEASUREMENT. This measurement will contain not only the sensors response to the external magnetic field, H, but also the Offset; in other words,

   Output1 = +H + Offset.

3) Perform a RESET. This resets the internal magnetization of the sensing resistors in the direction of the RESET field, which is opposite to the SET field (180° opposed).
4) Perform a MEASUREMENT. This measurement will contain both the sensors response to the external field and also the Offset. In other words,

   Output2 = -H + Offset.

5) Finally, calculate H by subtracting the two measurements and dividing by 2. This procedure effectively eliminates the Offset from the measurement and therefore any changes in the Offset over temperature.

Note: *To calculate and store the offset; add the two measurements and divide by 2. This calculated offset value can be subtracted from subsequent measurements to obtain H directly from each measurement.*

Time between the SET/Measure and RESET/Measure operation needs to be kept as short as possible to minimize error induced by the applied magnetic field changing between the two operations.

The two measurement examples below show how using SET/RESET eliminates the error due to the offset changing as a function of temperature. The explanation only examines the X axis but is applicable to all axes.

Given:

Sensitivity = 4096 counts/gauss

Offset = 8192 at 25 ℃

Offset Temperature coefficient = 0.4mG/C

Hx = Applied Magnetic field = 0.5 gauss

Case 1: Measurement NOT using SET/RESET

At 25C a measurement is taken. The device reports 34816 (Offset + Hx * Sensitivity) => (32768 + 0.5Gauss * 4096Counts/Gauss). The measurement is converted to magnetic field intensity using the equation:

Hx = (Measurement – Offset) /Sensitivity = (34816 – 32768)/4096 = 0.5 gauss

At -40 ℃ a measurement is taken. The reported value reported could be 34816 ±(0.4mGauss/C * 65C*4096counts/Gauss) = 34923 to 34710. Let us assume it was 34923. Now the calculated magnetic field is:

Hx = (34923 – 23768) /4096 = 0.525 gauss

There is 25 mGauss of error. This error is due to Null Field output value changing with temperature.

Case 2: Measurement using SET/RESET

At 25C a SET command is issued and a measurement is taken. The value reported is 34816 (32768 + 0.5Gauss * 4096 Counts/Gauss).

Now a RESET Command is issued which reverses the polarity of the sensor and another measurement is taken. The reported value is 30720, (32768 - 0.5Gauss* 4096 Counts/Gauss). The field is calculated from the two measurements as:

Hx = (Measurement1 – Measurement2) /2 /Sensitivity = (34816 – 30720) /2 /4096 = 0.5 gauss

At -40C the same procedure is used to make the measurement

A SET command is issued and a measurement is taken. The value reported is 34923 (32768 + 0.5Gauss * 4096Counts/Gauss + 0.4mGauss/C * 65C*4096counts/Gauss).

Now a RESET Command is issued flipping the polarity of the sensor and another measurement is taken. The reported value is 30827, (32768 - 0.5Gauss * 4096Counts/Gauss + 0.4mGauss/C * 65C*4096Counts/Gauss).

Hx = (Measurement1 – Measurement2) /2 /Sensitivity = (34923 – 30827) /2 /4096 = 0.5 gauss
The temperature variation induced offset error has been eliminated.

OPERATING TIMING

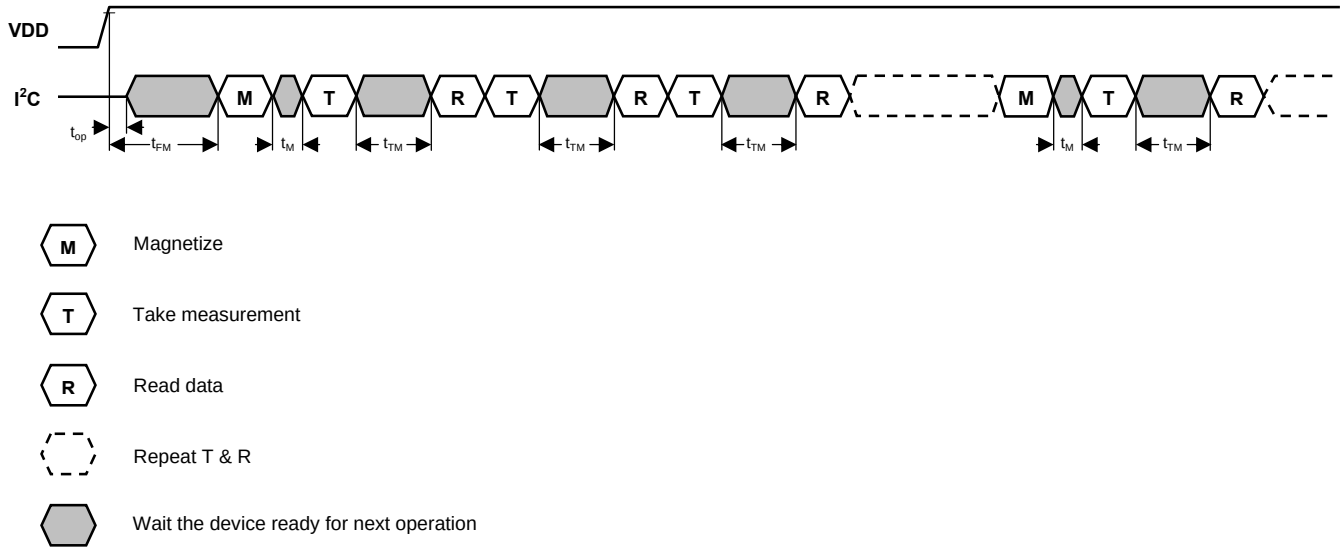

Operating Timing Diagram

Parameter	Symbol	Min.	Typ.	Max.	Unit
Time to operate device after Vdd valid	t_{op}	5			mS
Time from Refill Cap to SET/RESET	t_{TM}	50			mS
Time to measure magnetic field	t_{TM} BW=00	10			mS
	t_{TM} BW=01	5			mS
	t_{TM} BW=10	3			mS

STORAGE CONDITIONS

Temperature: <30 ℃
Humidity: <60%RH
Period: 1 year (after delivery)

Moisture Sensitivity Level: 3
Bake Prior to Reflow: storage period more than 1 year, or humidity indicator card reads >60% at 23 ±5 °C
Bake Procedure: refer to J-STD-033
Bake to Soldering: <1 week under 30 ℃, 60% RH condition

SOLDERING RECOMMENDATIONS

MEMSIC magnetic sensor is capable of withstanding an MSL3 / 260C solder reflow. Following is the reflow profile:

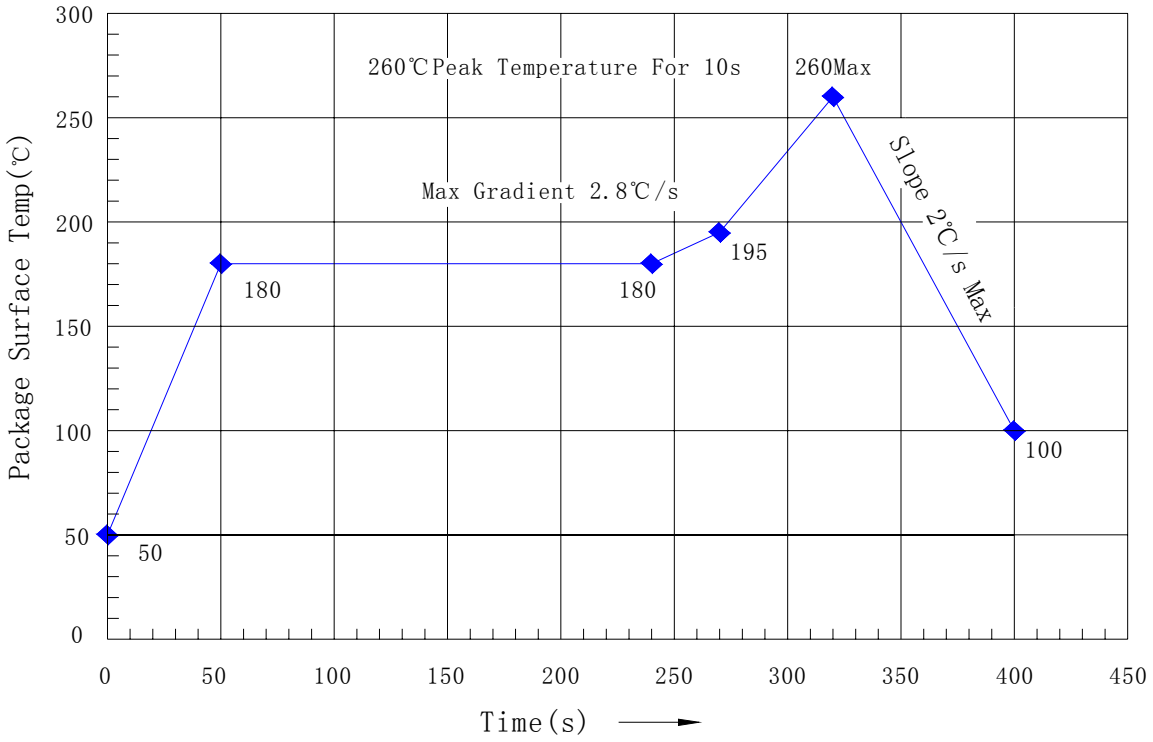

Note:

- Reflow is limited by 2 times
- The second reflow cycle should be applied after device has cooled down to 25 ℃ (room temperature)
- This is the reflow profile for Pb free process
- The peak temperature on the sensor surface should be limited under 260 ℃ for 10 seconds.
- Solder paste's reflow recommendation should be followed to get the best SMT quality.

If the part is mounted manually, please ensure the temperature could not exceed 260 ℃ for 10 seconds.

PACKAGE DRAWING (LGA package)

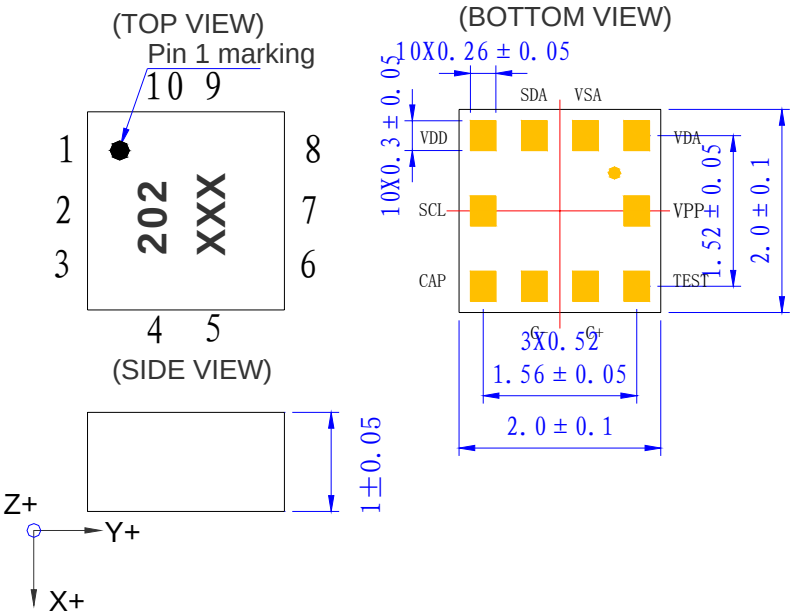
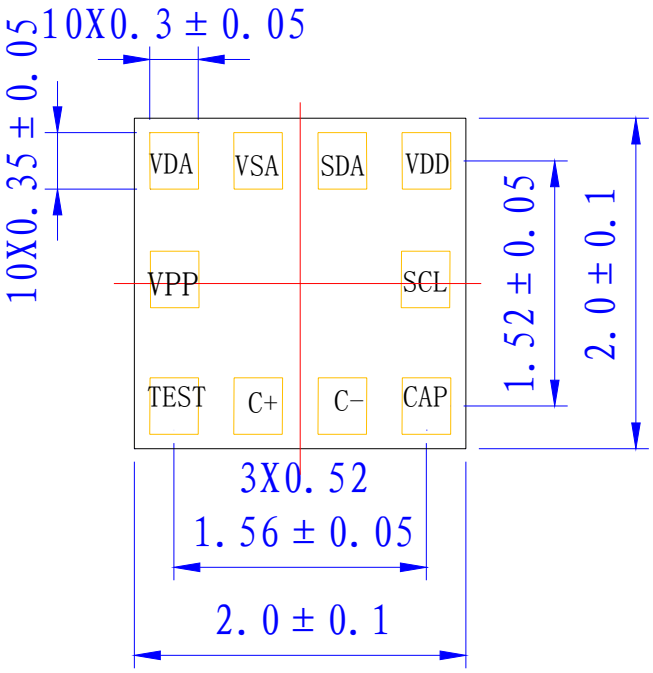
LAND PATTERN