KPC6N137 Series

8PIN HIGH-SPEED OUTPUT PHOTOCOUPLER

Description

The KPC6N137 series consist of an LED. It is a super high-speed digital output type photocoupler packaged in a 8 pin DIP package and available in wide-lead spacing and SMD option.

Schematic

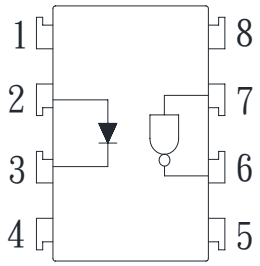

1. N.C.	5. GND
2. Anode	6. Vo
3. Cathode	7. V_E
4. N.C.	8. Vcc

Features

1. Pb free and RoHS compliant
2. Super high-speed response (tPLH,tPHL:typ.45ns at RL=350Ω)
3. Instantaneous common mode rejection voltage(CMH:typ. 500V/us)
4. High isolation voltage between input and output (Viso:5000Vrms)
5. Low input current drive (IFHL: Max. 5mA)
6. LSTTL and TTL compatible output
7. Agency Approvals:
   - UL1577 / CUL C22.2 No.1 & NTC No.5, File No. E169586
   - VDE EN 60747, File No. 40020973

Applications

- High speed interfaces for computer peripherals, microcomputer systems
- High speed line receivers
- Noise reduction
- Interfaces for data transmission equipment

Truth Table

Input	Enable	Output
H	H	L
L	H	H
H	L	H
L	L	H
H	NC	L
L	NC	H

Outside Dimension

Unit : mm

1.Dual-in-line type

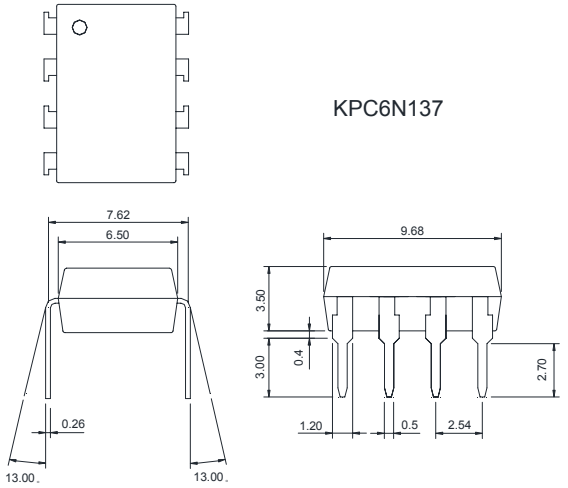

KPC6N137

2.Surface mount type

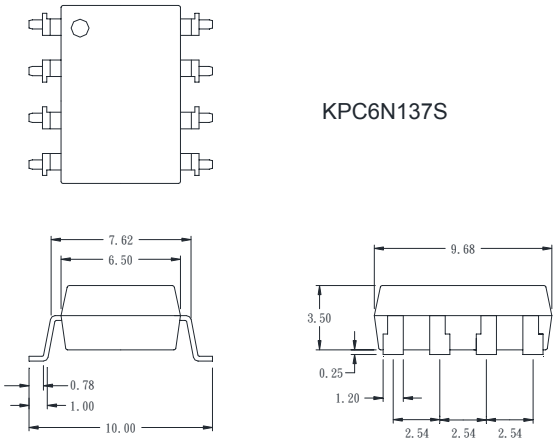

KPC6N137S

3.Long creepage distance type

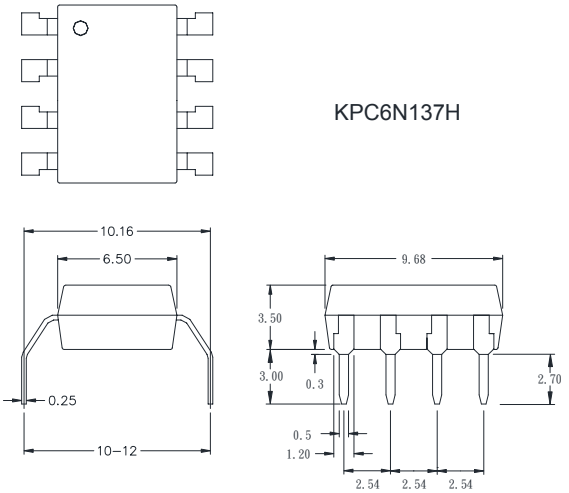

KPC6N137H

4.Long creepage distance
for surface mount type

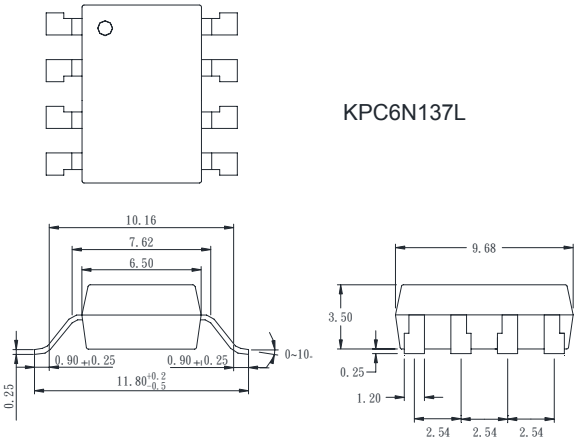

KPC6N137L

TOLERANCE: ±0.2mm

Device Marking

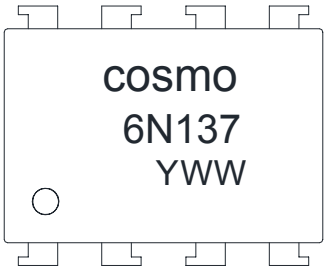

Notes:

cosmo
6N137
YWW Y: Year code / WW: Week code

● Absolute Maximum Ratings

(Ta = 25°C)

Parameter		Symbol	Rating	Unit
Input	Forward current (*1)	I_F	25	mA
	Peak forward current (*2)	I_{FM}	40	mA
	Reverse voltage	V_R	5	V
	Power dissipation	P_D	45	mW
Output	Supply voltage	Vcc	7	V
	Enable voltage	V_E	5.5	V
	High level output voltage	V_{OIL}	7	V
	Low level output current	I_{OL}	50	mA
	Output collector power dissipation	P_C	85	mW
Isolation voltage 1 minute (*3)		Viso	5000	Vrms
Operating temperature		Topr	-40 to +85	℃
Storage temperature		Tstg	-55 to +125	℃
Soldering temperature 10 seconds		Tsol	260	℃

● Recommended Operating Conditions

Parameter	Symbol	Min	Max	Unit
Low level input current	I_{FL}	0	250	uA
High level input current	I_{FH}	7.0	15	mA
High level enable voltage	V_{EH}	2.0	Vcc	V
Low level enable voltage	V_{EL}	0	0.8	V
Supply voltage	V_{CC}	4.5	5.5	V
Fanout (TTL load)	N	-	8	-

● Electro-optical Characteristics

(Ta = 25℃)

Parameter	Symbol	Conditions	Min.	Typ.	Max.	Unit
Input forward voltage (*4)	V_F	I_F=10mA,Ta=25℃	–	1.6	1.75	V
Input reverse voltage	BV_R	I_R=10uA,Ta=25℃	5	–	-	V
Input capacitance	C_{IN}	V_F=0, f=1MH_Z	–	60	-	pF
Logic (1) output current	I_{OH}	V_{CC}=5.5V,V_O=5.5V,I_F=250uA,V_E=2.0V	-	2	250	uA
Logic (0) output voltage	V_{OL}	V_{CC}=5.5V,V_{EH}=2V,I_F=5mA, I_{OL}(Sinking)=13mA	-	0.4	0.6	V
Logic (1) enable current	I_{EH}	V_{CC}=5.5V,V_E=2.0V	-	-0.8	-	mA
Logic (0) enable current	I_{EL}	V_{CC}=5.5V,V_E=0.5V	-2.0	-1.2	-	mA
Logic (1) supply current	I_{CCH}	V_{CC}=5.5V,V_E=0.5V,I_F=0mA	-	7	15	mA
Logic (0) supply current	I_{CCL}	V_{CC}=5.5V,V_E=0.5V,I_F=10mA	-	13	18	mA
Leak current (*5)	I_{I-O}	45%RH,Ta=25℃,t=5s,V_{I-O}=3000VDC	–	-	1.0	mA
Isolation resistance (input-output) (*5)	R_{I-O}	V_{I-O}=500V, Ta=25℃	-	10^{12}	-	Ω
Capacitance (input-output) (*5)	C_{I-O}	f=1MH_Z, Ta=25℃	-	0.6	-	pF

Propagation delay time Output (0)→(1) (*7)	t_{PLH}	I_F=7.5mA,V_{CC}=5V,R_L=350Ω, C_L=15pF,Ta=25℃	-	45	75	ns
Propagation delay time Output (1)→(0) (*7)	t_{PHL}		-	45	75	ns
Output rise-fall time (10 to 90%)	tr,tf	I_F=7.5mA,VCC=5V,R_L=350Ω,C_L=15pF	-	30	-	ns
Enable propagation delay time Output (1)→(0) (*8)	t_{ELH}	I_F=7.5mA,R_L=350Ω,C_L=15pF, V_{EH}=3.0V, V_{EL}=0.5V	-	40	-	ns
Enable propagation delay time Output (0)→(1) (*8)	t_{EHL}		-	15	-	ns
Instantaneous common mode rejection voltage "output(0)" (*9)	C_{MH}	I_F=0mA, V_{CM}=10V,V_O(Min)=2.0V R_L=350Ω	-	500	-	V/us
Instantaneous common mode rejection voltage "output(1)" (*9)	C_{ML}	I_F=5mA, V_{CM}=10V,V_O(Max)=0.8V R_L=350Ω	-	-500	-	V/us

Note) Typical values are all at Vcc = 5V, Ta= 25°C
*1 Ta=0 to 70°C.
*2 Pulse width <= 1ms
*3 40 to 80%RH AC for 1 minute ,f=60HZ.
*4 At Iin =10mA, V_F decreases at the rate of 1.6mV/°C if the temperature goes up.*6 Ta=0 to 70°C.
*5 Measured as 2-pin element. Connect pins 2 and 3, connect pins 5, 6, 7 and 8.
*6 DC current transfer ratio is defined as the ratio of output collector current to forward bias input current.
*7 Refer to the Fig. 1.
*8 Refer to the Fig. 2.
*9 C_{MH} represents a common mode voltage ignorable rise time ratio that can hold logic (1) state in output.
C_{ML} represents a common mode voltage ignorable fall time ratio that can hold logic (0) state in output.

● Circuit Block Diagram

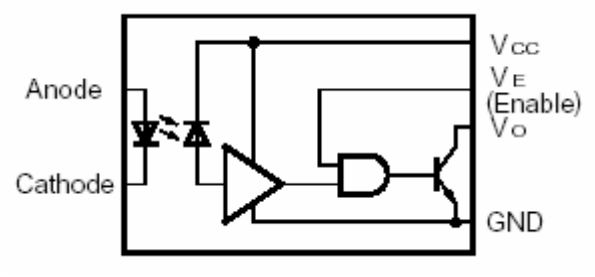

- **Test Circuit for Propagation Delay time**

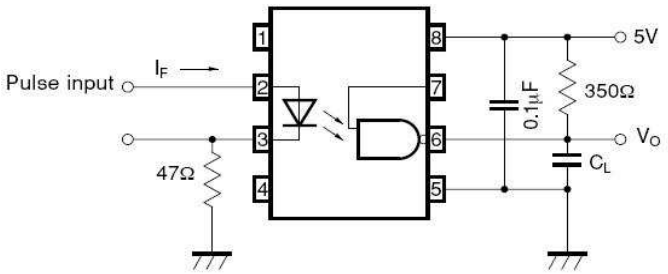

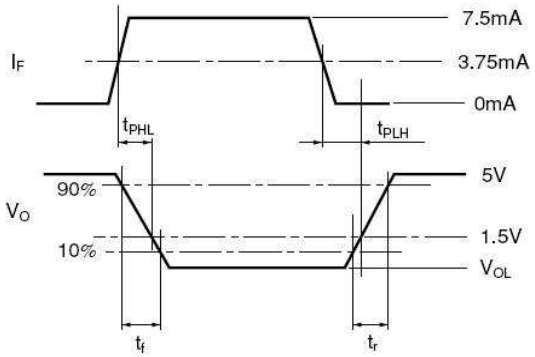

- **Test Circuit for Enable Propagation Delay Time**

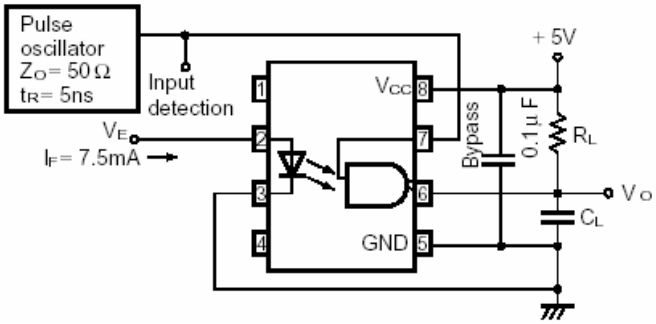

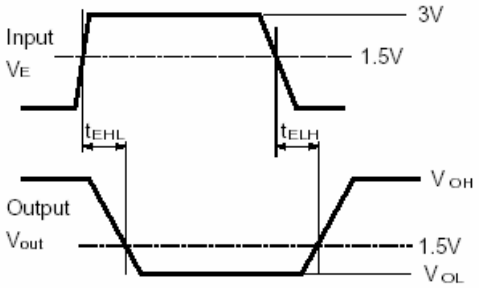

- **Test Circuit for Instantaneous Common Mode Rejection Voltage**

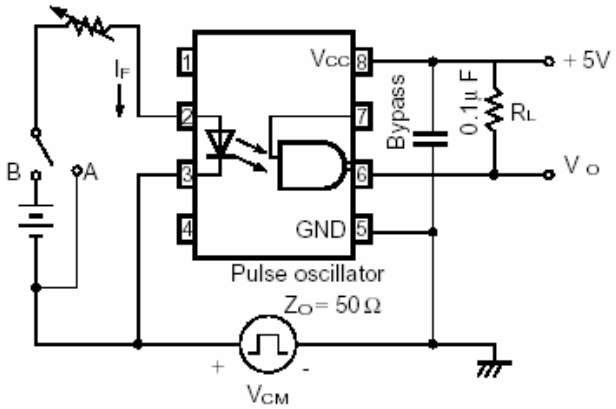

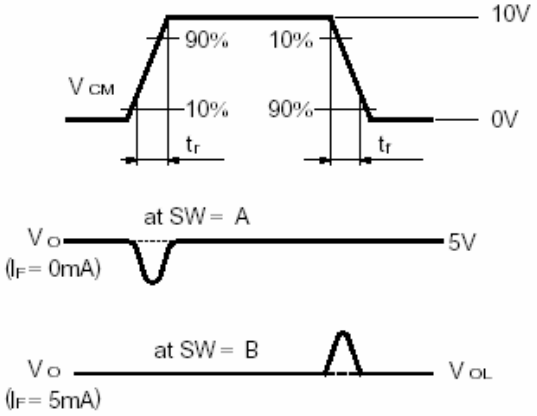

Fig.1 Low Level Output Voltage vs. Ambient Temperature

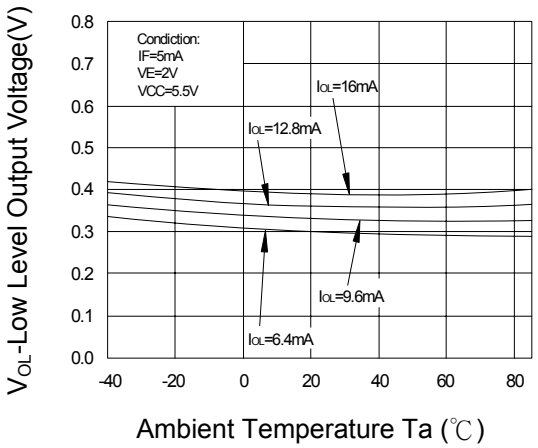

Fig.2 Input Diode Forward Voltage vs. Forward Current

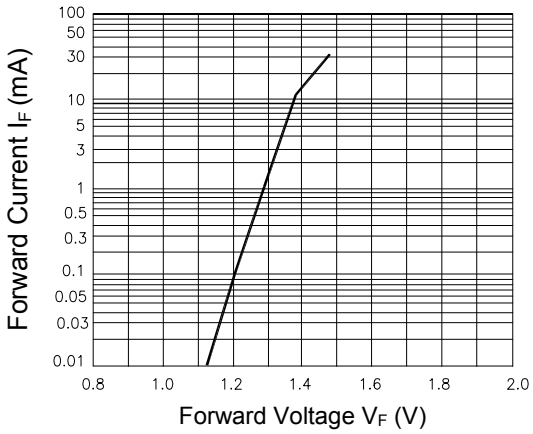

Fig.3 Switching Time vs. Forward Current

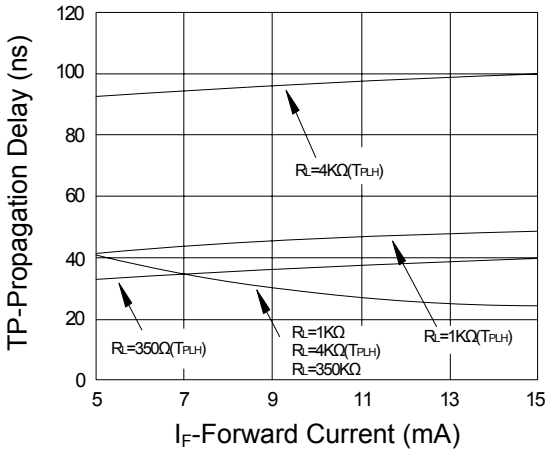

Fig.4 Low Level Output Current vs. Ambient Temperature

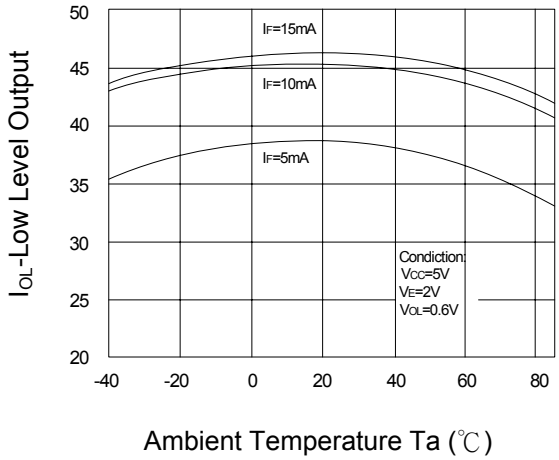

Fig.5 Input Threshold Current vs. Ambient Temperature

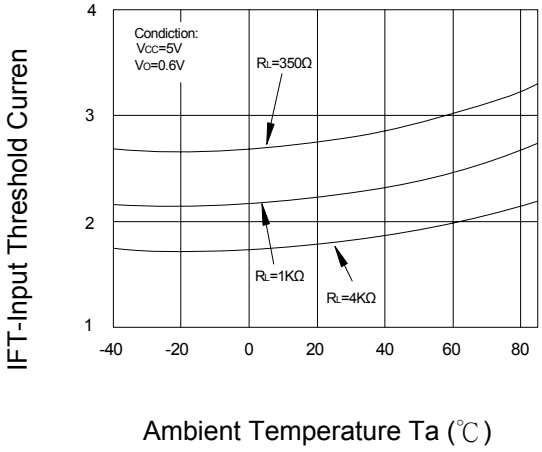

Fig.6 Output Voltage vs. Input Forward Current

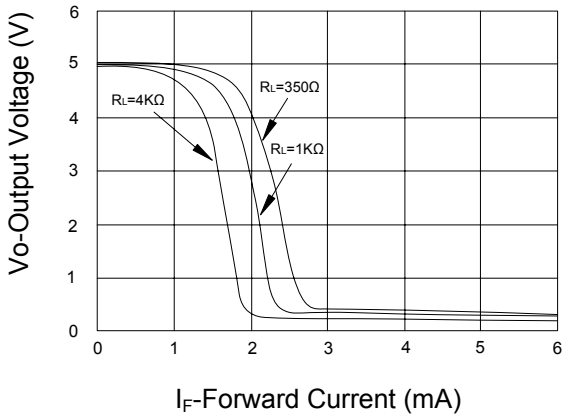

Fig.7 Pulse Width Distortion vs. Ambient Temperature

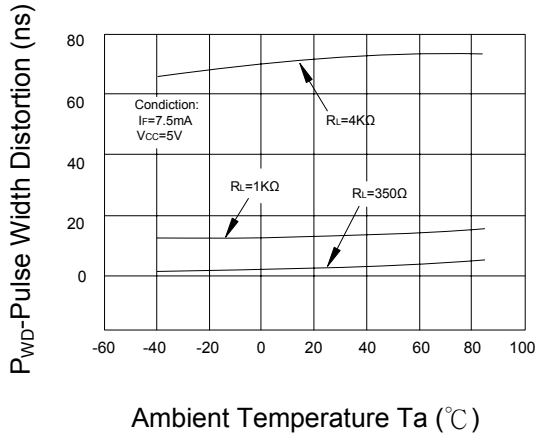

Fig.8 Rise and Fall Time vs. Ambient Temperature

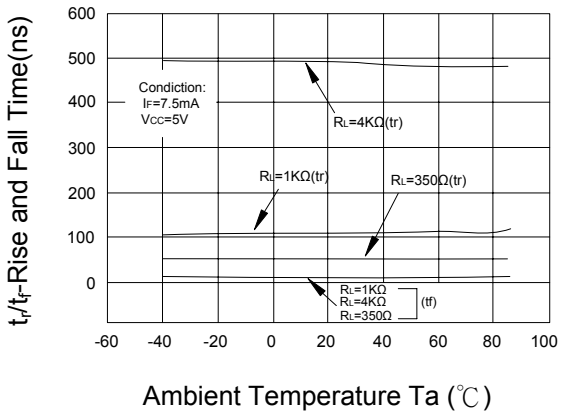

Fig.9 Switch Time vs. Ambient Temperature

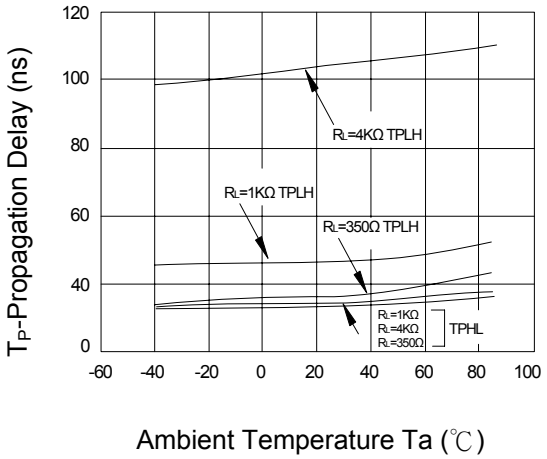

Fig.10 High Level Output Current vs. Ambient Temperature

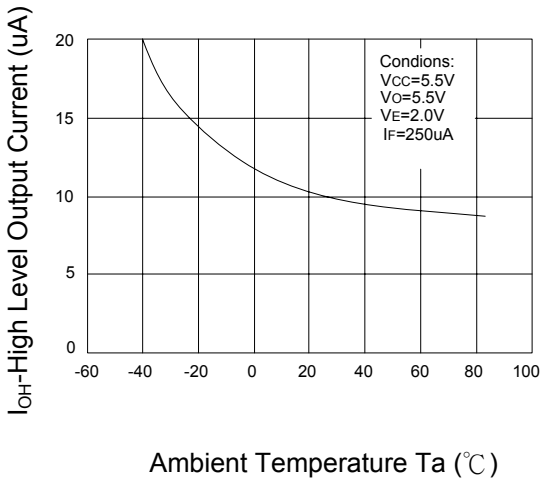

Recommended Soldering Conditions

(a) Infrared reflow soldering：

- Peak reflow soldering： 260℃ or below (package surface temperature)
- Time of peak reflow temperature： 10 sec
- Time of temperature higher than 230℃： 30-60 sec
- Time to preheat temperature from 180~190℃： 60-120 sec
- Time(s) of reflow： Two
- Flux： Rosin flux containing small amount of chlorine (The flux with a maximum chlorine content of 0.2 Wt% is recommended.)

Recommended Temperature Profile of Infrared Reflow

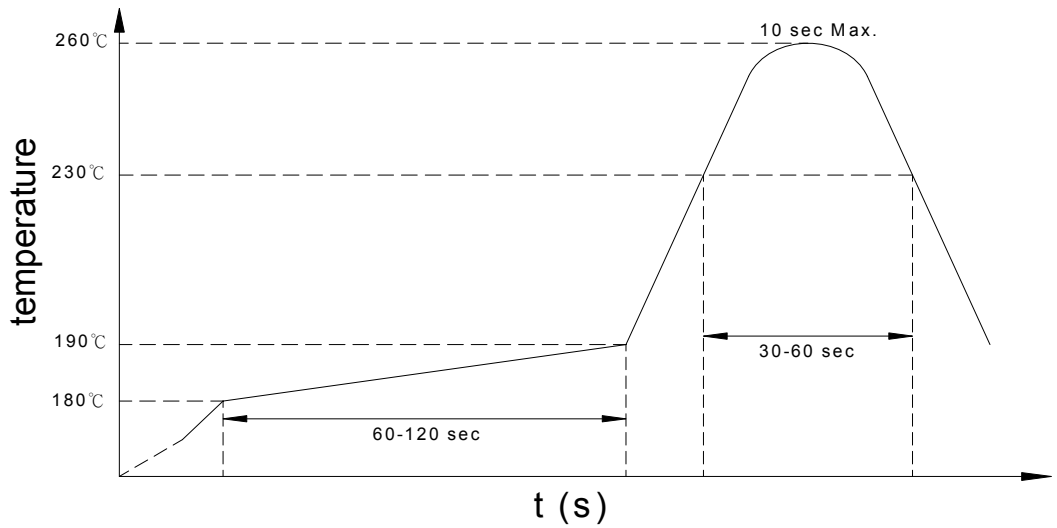

(b) Wave soldering：

- Temperature： 260℃ or below (molten solder temperature)
- Time： 10 seconds or less
- Preheating conditions： 120℃ or below (package surface temperature)
- Time(s) of reflow： One
- Flux： Rosin flux containing small amount of chlorine (The flux with a maximum chlorine content of 0.2 Wt% is recommended.)

(c) Cautions：

- Fluxes： Avoid removing the residual flux with freon-based and chlorine-based cleaning solvent.
- Avoid shorting between portion of frame and leads.

Numbering System

KPC6N137 X (Y)

Notes:

KPC6N137 = Part No.

X = Lead form option (blank、S、H、L)

Y = Tape and reel option (TL、TR、TLD、TRU)

Option	Description	Packing quantity
S (TL)	surface mount type package + TL tape & reel option	1000 units per reel
S (TR)	surface mount type package + TR tape & reel option	1000 units per reel
L (TLD)	long creepage distance for surface mount type package + TLD tape & reel option	800 units per reel
L (TRU)	long creepage distance for surface mount type package + TRU tape & reel option	800 units per reel

Recommended Pad Layout for Surface Mount Lead Form

1.Surface mount type

8-pin SMD

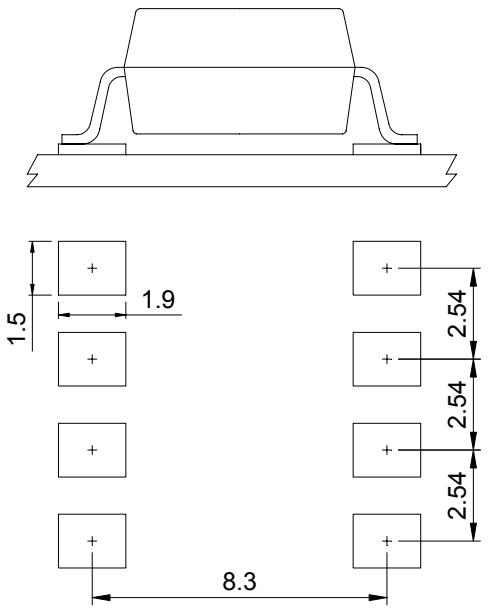

2.Long creepage distance for surface mount type

8-pin L

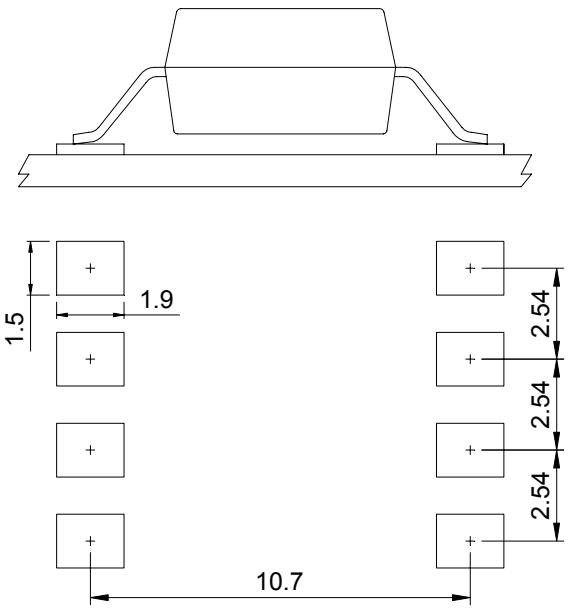

Unit :mm

- **8-pin SMD Carrier Tape & Reel**

unit：mm

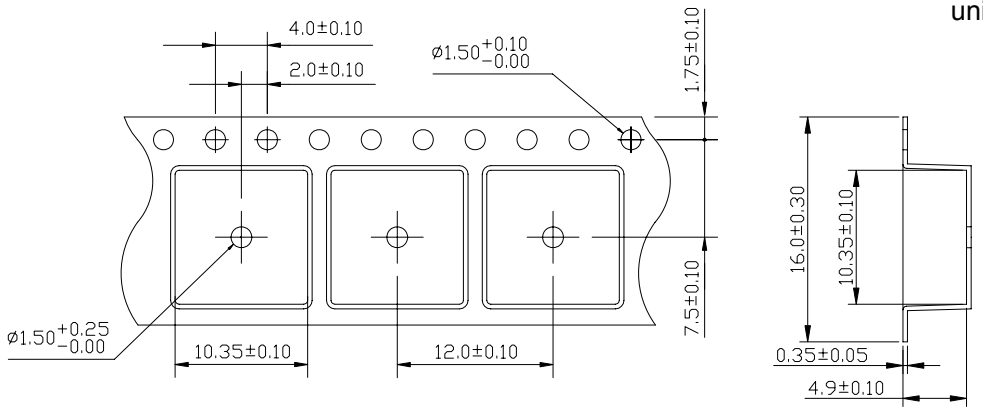

TL

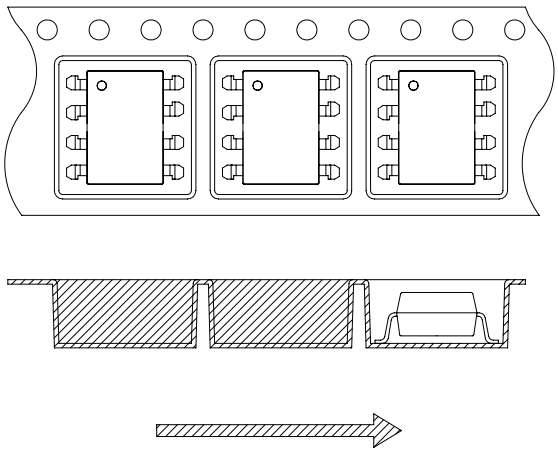

Direction of feed from reel

TR

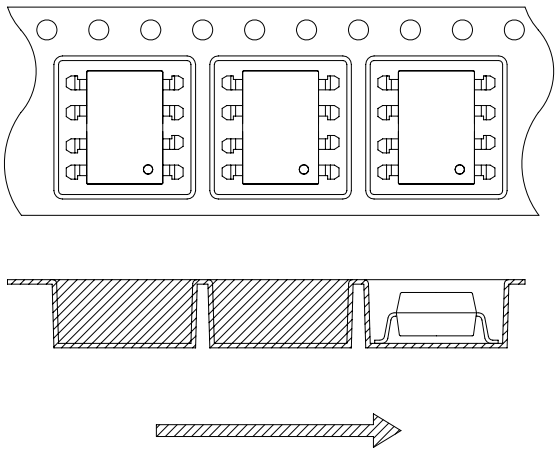

Direction of feed from reel

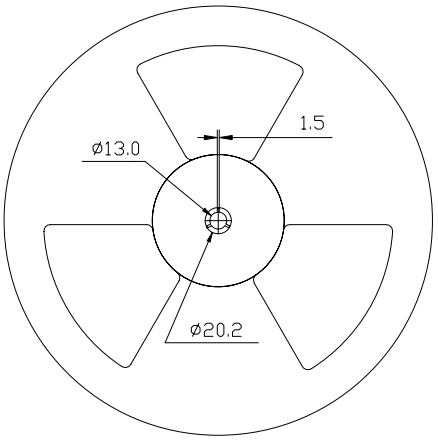

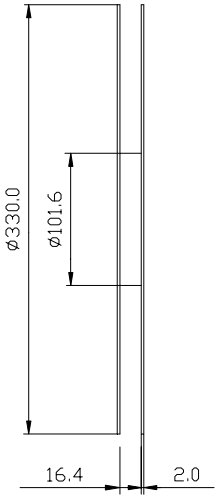

Quantity：1000pcs/reel

● 8-pin L Carrier Tape & Reel

Unit:mm

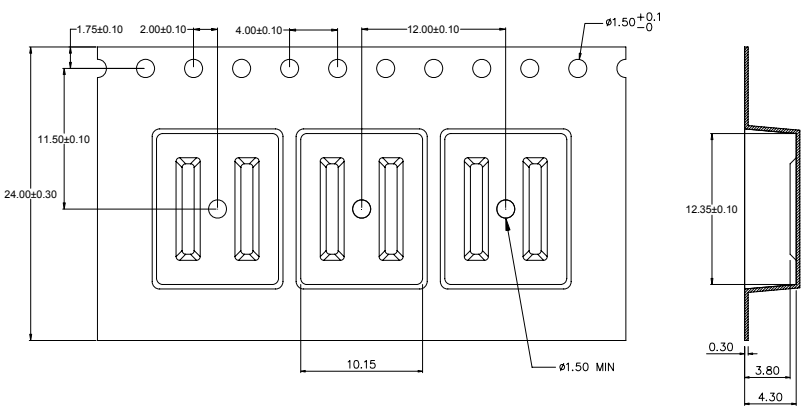

TOLERANCE：±0.2mm

TLD

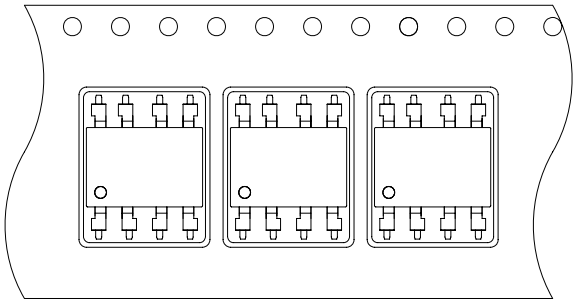

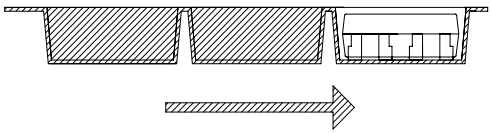

Direction of feed from reel

TRU

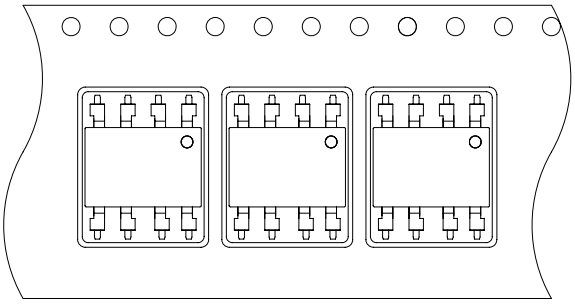

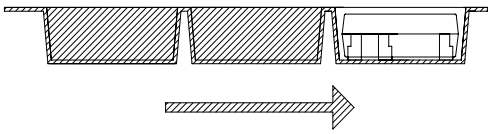

Direction of feed from reel

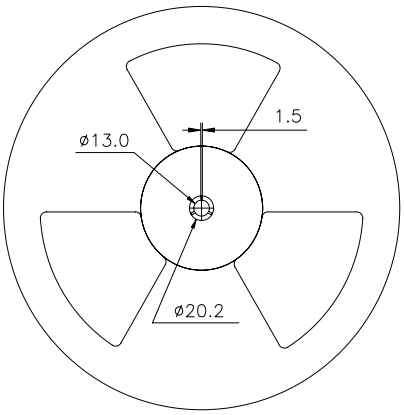

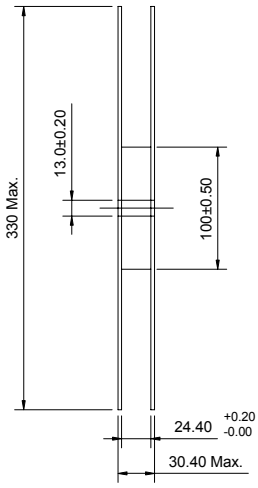

Quantity：800pcs/reel

Application Notice

The content of datasheet is the guidance for product use only. cosmo takes no responsibility to the accuracy of the information provided here. For continuously improving all of products, including quality, reliability, function...etc., cosmo reserves the right to change the specification, characteristics, data, materials, and structure of products without notice. Please contact with cosmo to obtain the latest specification.

It would be required to comply with the absolute maximum ratings listed in the specification. cosmo has no liability and responsibility to the damage caused by improper use of the products.

cosmo products are intended to be designed for use in general electronics application list below:

a. Personal computer
b. OA machine
c. Audio / Video
d. Instrumentation
e. Electrical application
f. Measurement equipment
g. Consumer electronics
h. Telecommunication

cosmo devices shall not be used or related with equipment requiring higher level of quality / reliability, or malfunction, or failure which may cause loss of human life, bodily injury, includes, without limitation:

a. Medical and other life supporting equipments
b. Space application
c. Telecommunication equipment (trunk lines)
d. Nuclear power control
e. Equipment used for automotive vehicles, trains, ships...etc.

This publication is the property of cosmo. No part of this publication may be reproduced or copied in any form or any means electronically or mechanically for any purpose, in whole or in part without any written permission expressed from cosmo.