Round connector
male flange M12 x 1 for backplane mounting
EC-FSFD3-0,5/16

Industrial Automation

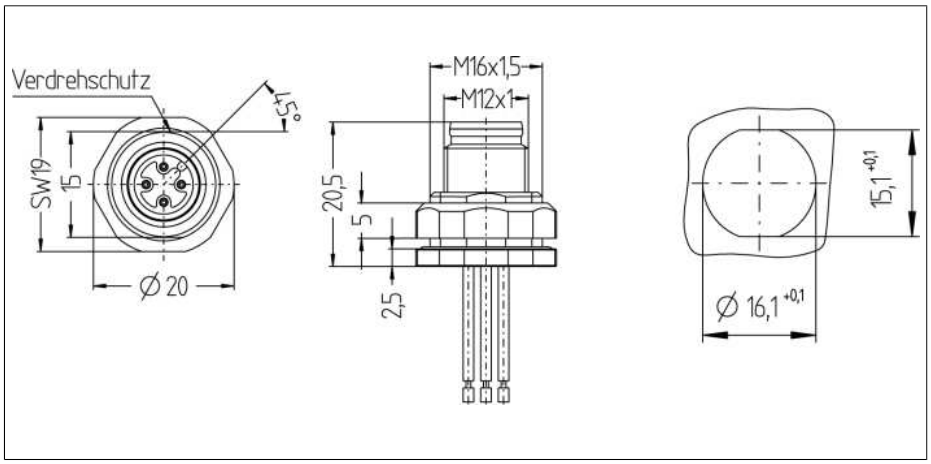

- **Ready-made round connector**
- **Protection class IP67**
- **Backplane mounting**
- **Connected via strands**
- **Also available with print or solder contacts**

Wiring diagram

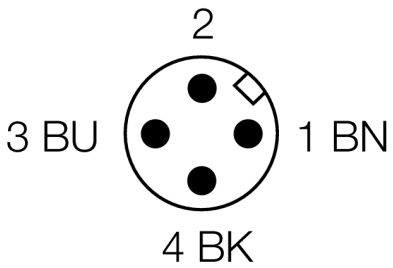

Type code	EC-FSFD3-0,5/16
Ident no.	8027509
Connector A side	male connector, M12 x 1, axial
Number of pins	3
Contacts	metal, CuZn, gold-plated
Contact carriers	plastic, PA GF, black
Grip	metal, CuZn, nickel-plated
Mechanical lifespan	> 100 mating cycles
Pollution degree	3
Core insulation	PVC
Core colors	BN, BU, BK
Core cross-section	3x0.34mm²
Litz wire length	0.5 m
Rated voltage [Umax]	250 V
Insulation resistance	≥ 10^8 Ω
Ampacity	Max. 4 A
Ambient temperature Connector	-30… +90°C

Edition • 2013-07-13T23:28:00+02:00

Hans Turck GmbH & Co.KG • D-45472 Mülheim an der Ruhr • Witzlebenstraße 7 • Tel. 0208 4952-0 • Fax 0208 4952-264 • more@turck.com • www.turck.com