JENOPTIK

Fiber-Coupled Diode Lasers

cw, passively cooled with air or tap water

JOLD-100-CPXF-2P A
JOLD-140-CPXF-2P W

Design 215535524
Design 215535424

Features:

- High optical output power up to 140 W cw
- Fiber core diameter: 400 µm (NA 0.22)
- Long lifetime > 20,000 h, high reliability
- Air cooling possible

Applications:

- Pumping of solid-state lasers and fiber lasers
- Material processing
- Medical applications

Fiber-Coupled Diode Lasers

cw, passively cooled with air or tap water

Preliminary Specifications (Start of Life)

Product	JOLD-100-CPXF-2P A Design 215535524				JOLD-140-CPXF-2P W Design 215535424				
Operation Mode	cw, power modulation only between threshold and maximum current								
Maximum Optical Output Power	80	100	100	100	100	140	140	140	W
Center Wavelength at 25 °C	880 *	915 *	938 *	976 *	880	915	938	976	nm
Center Wavelength Variation at 25 °C	5 *	5 *	5 *	5 *	3	5	5	3	nm
Typical Spectral Bandwidth (FWHM)	5	5	5	5	5	5	5	5	nm
Maximum Spectral Bandwidth (FWHM)	6	6	6	6	6	6	6	6	nm
Typical Operation Current	90	85	85	85	95	95	95	95	A
Maximum Operation Current	105	100	100	100	105	105	105	105	A
Typical Threshold Current	9	6	6	6	9	6	6	6	A
Maximum Threshold Current	12	9	9	9	12	9	9	9	A
Typical Slope	1.3	1.3	1.3	1.3	1.6	1.6	1.6	1.6	W/A
Minimum Slope	1.0	1.0	1.0	1.0	1.4	1.4	1.4	1.4	W/A
Maximum Operating Voltage	4.5	4.5	4.5	4.5	4.5	4.5	4.5	4.5	V
Fiber Core Diameter, Numerical Aperture	400 µm, NA 0.22; free standing fiber inside F-SMA 905 towards the module								
Fiber Connector	F-SMA 905, potential free; **metal armored patchcord only!**								
Power Monitor	Infineon, SFH 229								
Pilot Laser	0.5 ... 3 mW, 650 nm ± 15 nm, 3 ... 5 V, 40 ± 15 mA, power not adjustable (only for teaching and targeting purposes before laser operation)								
Anode, Cathode Connectors	M8, M6 (e.g. socket cap screws ISO 4762)								
Signal Connector	D-Sub, male, 15 pin								
Operation Conditions	Non-condensing atmosphere								
Expected Lifetime (Constant Current)	> 10,000 h				> 20,000 h, partly under qualification; 808 nm: 10,000 h				
Cooling:									
Flow Rate	No water or TEC needed, air cooling possible				> 3 l/min				
Water Temperature					8 ... 20 °C				
Water Pressure					400 kPa maximum inlet and outlet pressure, < 80 kPa pressure drop				
Water Connectors					Ø 6 mm push-in fittings				
Water Quality					Industrial water, unfiltered up to a particle size of 0.5 mm				
Diode Laser Operating Temperature	15 ... 55 °C, measured with internal sensor * wavelength specification at 50 °C				15 ... 35 °C, measured with internal sensor				
Integrated Temperature Sensor	PT 100 (PT 1000 or NTC 10 k optional), separately for each diode laser								
Note	Specify exact wavelength needed with your order								
	See General User Information!								

Design 215535424

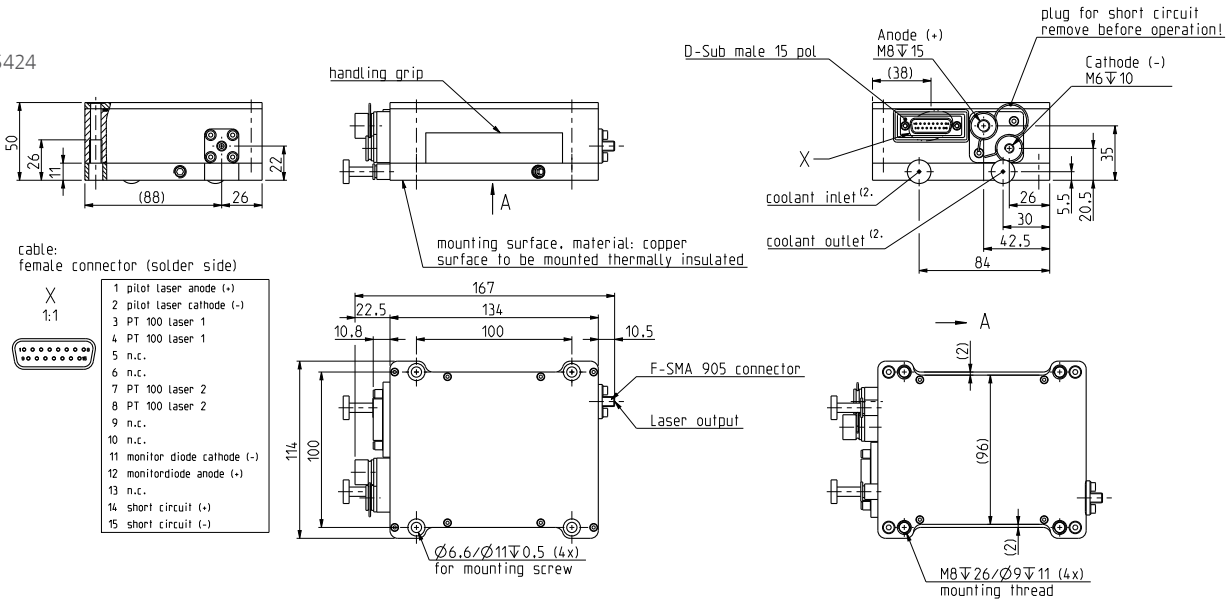

JENOPTIK I Lasers & Material Processing
JENOPTIK Laser GmbH
Goeschwitzer Strasse 29 I 07745 Jena I Germany
Phone: +49 3641 65-3053 I Fax: +49 3641 65-4011
E-mail: sales-laser.lm@jenoptik.com I www.jenoptik.com/diodelasers

Specifications may change in compliance with our quality management system.

11/2012