FUJITSU MICROELECTRONICS
DATA SHEET

DS07-13714-2E

16-bit Proprietary Microcontroller

CMOS

F²MC-16LX MB90460/465 Series

MB90462/467/F462/F462A/F463A/V460

■ DESCRIPTION

The MB90460/465 series is a line of general-purpose, Fujitsu 16-bit microcontrollers designed for process control applications which require high-speed real-time processing, such as consumer products.

While inheriting the AT architecture of the F²MC* family, the instruction set for the F²MC-16LX CPU core of the MB90460/465 series incorporates additional instructions for high-level languages, supports extended addressing modes, and contains enhanced multiplication and division instructions as well as a substantial collection of improved bit manipulation instructions. In addition, the MB90460/465 has an on-chip 32-bit accumulator which enables processing of long-word data.

The peripheral resources integrated in the MB90460/465 series include : an 8/10-bit A/D converter, UARTs (SCI) 0 to 1, 16-bit PPG timer, a multi-functional timer (16-bit free-run timer, input capture units (ICUs) 0 to 3, output compare units (OCUs) 0 to 5, 16-bit PPG timer, a waveform generator) , a multi-pulse generator (16-bit PPG timer, 16-bit reload timer, waveform sequencer) , PWC 0 to 1, 16-bit reload timer and DTP/external interrupt.

* : F²MC stands for FUJITSU Flexible Microcontroller, a registered trademark of FUJITSU MICROELECTRONICS LIMITED.

■ FEATURES

- Minimum execution time : 62.5 ns/4 MHz oscillation (Uses PLL clock multiplication) maximum multiplier = 4
- Maximum memory space
  16 Mbyte
  Linear/bank access
- Instruction set optimized for controller applications
  Supported data types : bit, byte, word, and long-word types
  Standard addressing modes : 23 types
  32-bit accumulator enhancing high-precision operations
  Signed multiplication/division and extended RETI instructions

The information for microcontroller supports is shown in the following homepage.
Be sure to refer to the "Check Sheet" for the latest cautions on development.

"Check Sheet" is seen at the following support page

"Check Sheet" lists the minimal requirement items to be checked to prevent problems beforehand in system development.

http://edevice.fujitsu.com/micom/en-support/

Copyright©2001-2008 FUJITSU MICROELECTRONICS LIMITED All rights reserved
2008.8

(Continued)

- Enhanced high level language (C) and multi-tasking support instructions
  Use of a system stack pointer
  Symmetrical instruction set and barrel shift instructions
- Program patch function (for two address pointers)
- Enhanced execution speed : 4 byte instruction queue
- Enhanced interrupt function
  Up to eight programmable priority levels
  External interrupt inputs : 8 lines
- Automatic data transmission function independent of CPU operation
  Up to 16 channels for the extended intelligent I/O service
  DTP request inputs : 8 lines
- Internal ROM
  FLASH : 64Kbyte with flash security (MB90F462/F462A), 128Kbyte with flash security (MB90F463A)
  MASKROM : 64 Kbyte (MB90462/467)
- Internal RAM
  EVA : 8 Kbyte
  FLASH : 2 Kbyte
  MASKROM : 2 Kbyte
- General-purpose ports
  Up to 51 channels (Input pull-up resistor settable for : 16 channels)
- A/D Converter (RC) : 8 ch
  8/10-bit resolution selectable
  Conversion time : 6.13 µs (Min) , 16 MHz operation
- UART : 2 channels
- 16 bit PPG : 3 channels (MB90460 series), 2 channels (MB90465 series)
  Mode switching function provided (PWM mode or one-shot mode)
  Can be worked with a multi-functional timer, a multi-pulse generator (MB90460 series only) or individually
- 16 bit reload timer : 2 channels
  Can be worked with multi-pulse generator (MB90460 series only) or individually
- 16-bit PWC timer : 2 channels (MB90460 series), 1 channel (MB90465 series)
- Multi-functional timer
  Input capture : 4 channels
  Output compare with selectable buffer : 6 channels
  Free-run timer with up or up/down mode selection and selectable buffer : 1 channel
  16-bit PPG : 1 channel
  Waveform generator : (16-bit timer : 3 channels, 3-phase waveform or dead time)
- Multi-pulse generator
  16-bit PPG : 1 channel (MB90460 series only)
  16-bit reload timer : 1 channel
  Waveform sequencer : (16-bit timer with buffer and compare clear function) (MB90460 series only)
- Time-base counter/watchdog timer : 18-bit
- Low-power consumption mode :
  Sleep mode
  Stop mode
  CPU intermittent operation mode

(Continued)

(Continued)

- Package :
  LQFP-64 (FPT-64P-M23 : 0.65 mm pitch)
  QFP-64 (FPT-64P-M06 : 1.00 mm pitch)
  SDIP-64 (DIP-64P-M01 : 1.78 mm pitch)
- CMOS technology

■ PRODUCT LINEUP

Item \ Part number	MB90V460	MB90F462	MB90F462A	MB90F463A	MB90462	MB90467
Series	—	MB90460 series				MB90465 series
Classification	Development/ evaluation product	Mass-produced products (Flash ROM)			Mass-produced products (Mask ROM)	
ROM size	—	64 KBytes		128 KBytes	64 KBytes	
RAM size	8 KBytes	2 KBytes				
CPU function	Number of Instruction : 351 Minimum execution time : 62.5 ns / 4 MHz (PLL × 4) Addressing mode : 23 Data bit length : 1, 8, 16 bits Maximum memory space : 16 MBytes					
I/O port	I/O port (CMOS) : 51					
PWC	Pulse width counter timer : 2 channels					Pulse width counter timer : 1ch
	Timer function (select the counter timer from three internal clocks) Various Pulse width measuring function (H pulse width, L pulse width, rising edge to falling edge period, falling edge to rising edge period, rising edge to rising edge period and falling edge to falling edge period)					
UART	UART : 2 channels With full-duplex double buffer (8-bit length) Clock asynchronized or clock synchronized transmission (with start and stop bits) can be selectively used Transmission can be one-to-one (bi-directional communication) or one-to-n (Master-Slave communication)					
16-bit reload timer	Reload timer : 2 channels Reload mode, single-shot mode or event count mode selectable Can be worked with a multi-pulse generator or individually (MB90460 series only)					
16-bit PPG timer	PPG timer : 3 channels					PPG timer : 2ch
	PWM mode or single-shot mode selectable Can be worked with multi-functional timer / multi-pulse generator (MB90460 series only) or individually					
Multi-functional timer (for AC/DC motor control)	16-bit free-running timer with up or up/down mode selection and buffer : 1 channel 16-bit output compare : 6 channels 16-bit input capture : 4 channels 16-bit PPG timer : 1 channel Waveform generator (16-bit timer : 3 channels, 3-phase waveform or dead time)					
Multi-pulse generator (for DC motor control)	16-bit PPG timer : 1 channel Waveform sequencer (includes 16-bit timer with buffer and compare clear function)					Not present
	16-bit reload timer operation (toggle output, one shot output selectable) Event counter function : 1 channel built-in					
8/10-bit A/D converter	8/10-bit resolution (8 channels) Conversion time : Min. 6.13 μs (16 MHz internal clock)					

(Continued)

(Continued)

Item \ Part number	MB90V460	MB90F462	MB90F462A	MB90F463A	MB90462	MB90467
DTP/External interrupt	8 independent channels Selectable causes : Rising edge, falling edge, “L” level or “H” level					
Lower power consumption	Stop mode / Sleep mode / CPU intermittent operation mode					
Package	PGA256	LQFP-64 (FPT-64P-M23 : 0.65 mm pitch) QFP-64 (FPT-64P-M06 : 1.00 mm pitch) SDIP-64 (DIP-64P-M01 : 1.78 mm pitch)				
Power supply voltage for operation*	4.5 V to 5.5 V *					
Process	CMOS					

* : Varies with conditions such as the operating frequency (See section “■ ELECTRICAL CHARACTERISTICS”) . Assurance for the MB90V460 is given only for operation with a tool at a power supply voltage of 4.5 V to 5.5 V, an operating temperature of 0 to +25 °C, and an operating frequency of 1 MHz to 16 MHz.

■ PACKAGE AND CORRESPONDING PRODUCTS

Package	MB90V460	MB90F462	MB90F462A	MB90F463A	MB90462	MB90467
PGA256	○	×	×	×	×	×
FPT-64P-M23	×	○	○	○	○	○
FTP-64P-M06	×	○	○	○	○	○
DIP-64P-M01	×	○	○	○	○	○

○ : Available, × : Not available

Note : For more information about each package, see section “■ PACKAGE DIMENSIONS”.

■ DIFFERENCES AMONG PRODUCTS

Memory Size

In evaluation with an evaluation product, note the difference between the evaluation product and the product actually used. The following items must be taken into consideration.

- The MB90V460 does not have an internal ROM, however, operations equivalent to chips with an internal ROM can be evaluated by using a dedicated development tool, enabling selection of ROM size by settings of the development tool.
- In the MB90V460, images from $FF4000_H$ to $FFFFFF_H$ are mapped to bank 00, and $FE0000_H$ to $FF3FFF_H$ are mapped to bank FF only. (This setting can be changed by configuring the development tool.)
- In the MB90462/F462/F462A/F463A/467, images from $FF4000_H$ to $FFFFFF_H$ are mapped to bank 00, and $FF0000_H$ to $FF3FFF_H$ are mapped to bank FF only.

Difference between MB90460 series and MB90465 series

- Waveform sequencer, 16-bit PPG timer 1, and PWC 0 are not present in MB90465 series.

Difference between MB90F462, MB90F462A and MB90F463A

- 64Kbytes flash ROM is avaliable in MB90F462 and MB90F462A while 128Kbytes flash ROM is avaliable in MB90F463A.

■ PIN ASSIGNMENT

(TOP VIEW)

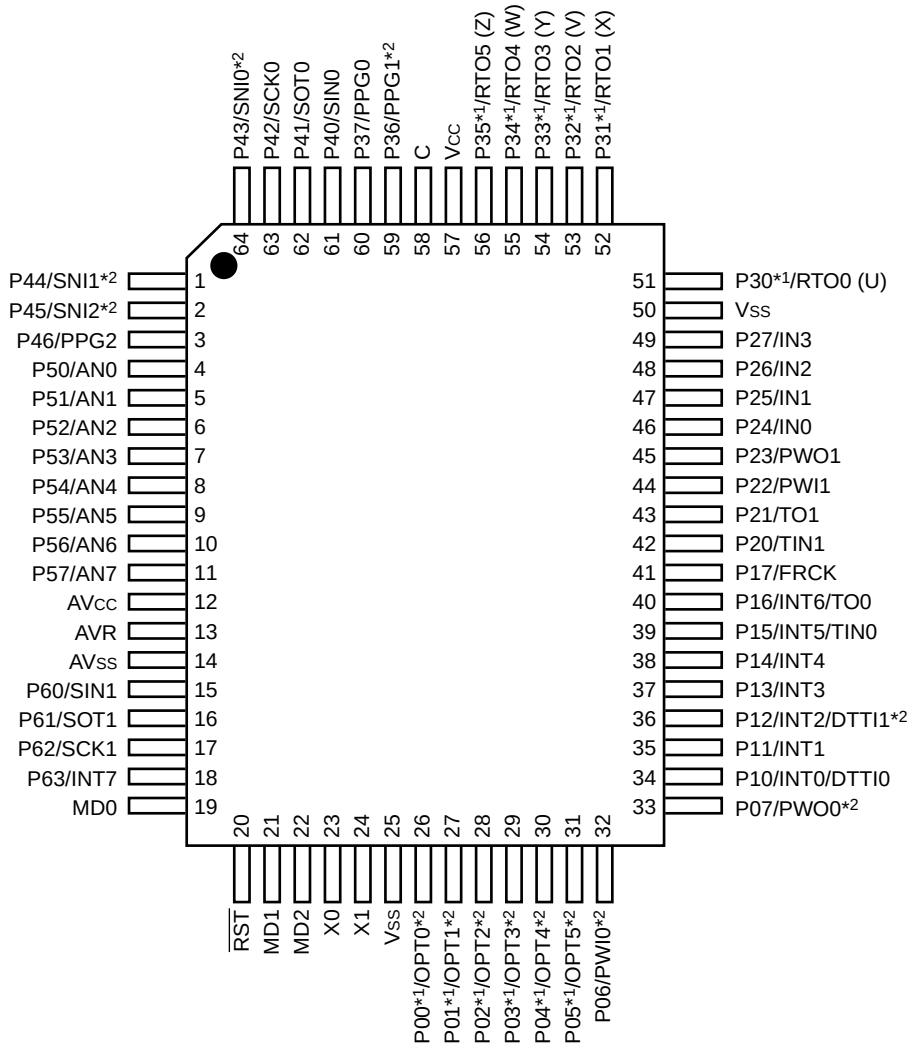

(FPT-64P-M06)

*1 : Heavy current pins

*2 : Resource function for these pins are not applicable to MB90465 series

(Continued)

(TOP VIEW)

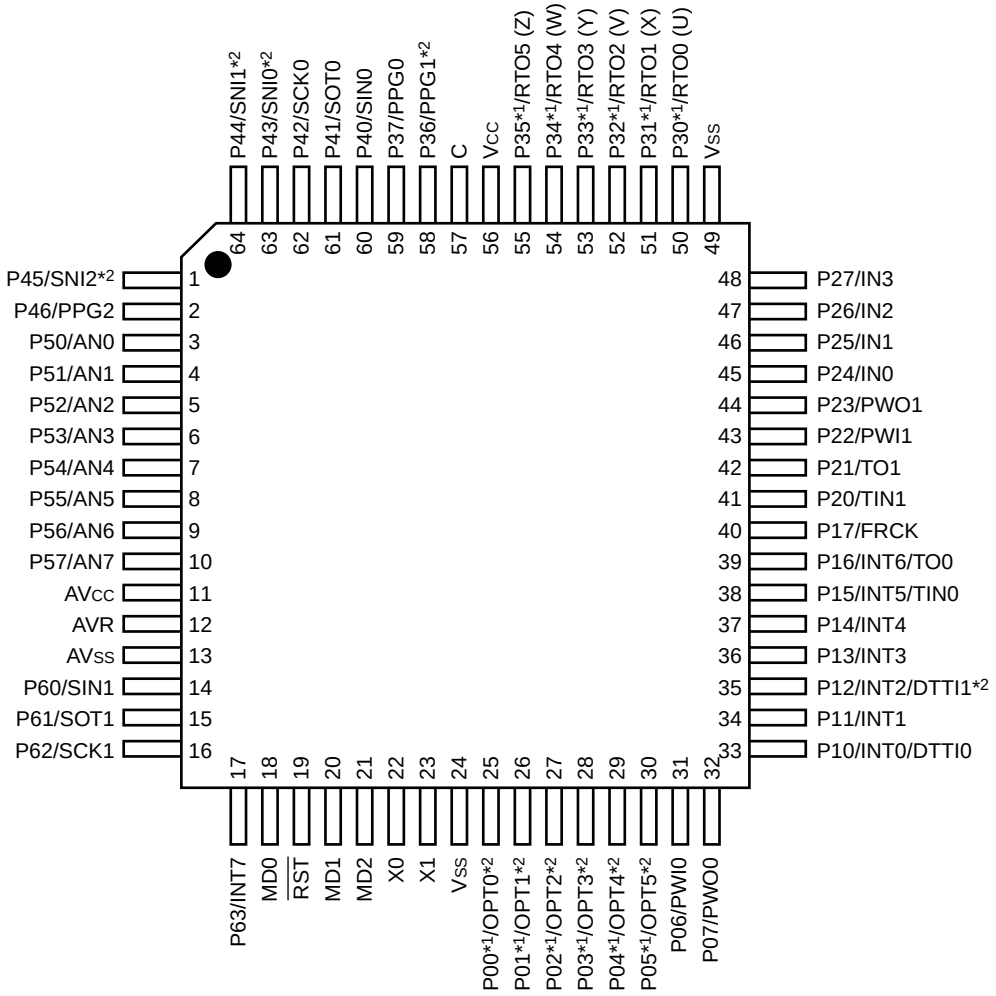

(FPT-64P-M23)

*1 : Heavy current pins

*2 : Resource function for these pins are not applicable to MB90465 series

(Continued)

(Continued)

(TOP VIEW)

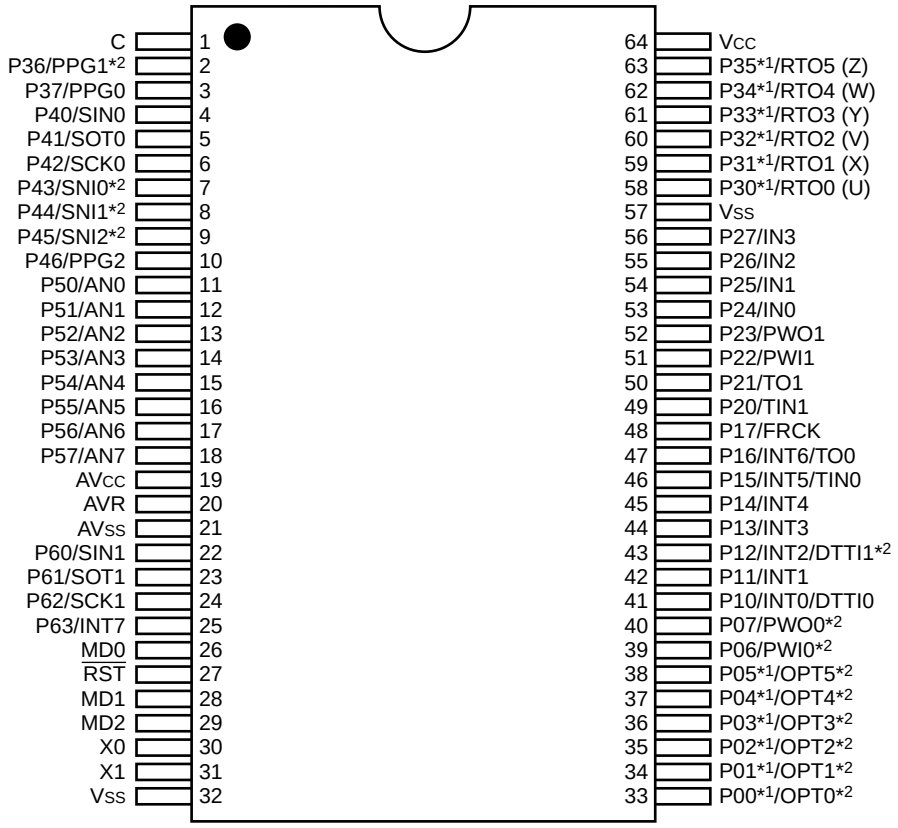

(DIP-64P-M01)

*1 : Heavy current pins

*2 : Resource function for these pins are not applicable to MB90465 series

■ PIN DESCRIPTION

Pin No.			Pin name	I/O circuit	Function
QFP*2	LQFP*1	SDIP*3			
23, 24	22, 23	30, 31	X0, X1	A	Oscillation input pins.
20	19	27	$\overline{\text{RST}}$	B	External reset input pin.
26 to 31	25 to 30	33 to 38	P00 to P05	D	General-purpose I/O ports.
			OPT0 to OPT5*4		Output terminals OPT0 to 5 of the waveform sequencer. These pins output the waveforms specified at the output data registers of the waveform sequencer circuit. Output is generated when OPE0 to 5 of OPCR is enabled.*4
32	31	39	P06	E	General-purpose I/O ports.
			PWI0*4		PWC 0 signal input pin.*4
33	32	40	P07	E	General-purpose I/O ports.
			PWO0*4		PWC 0 signal output pin.*4
34	33	41	P10	C	General-purpose I/O ports.
			INT0		Can be used as interrupt request input channels 0. Input is enabled when 1 is set in EN0 in standby mode.
			DTTI0		RTO0 to 5 pins for fixed-level input. This function is enabled when the waveform generator enables its input bits.
35	34	42	P11	C	General-purpose I/O ports.
			INT1		Can be used as interrupt request input channels 1. Input is enabled when 1 is set in EN1 in standby mode.
36	35	43	P12	C	General-purpose I/O ports.
			INT2		Can be used as interrupt request input channels 2. Input is enabled when 1 is set in EN2 in standby mode.
			DTTI1*4		OPT0 to 5 pins for fixed-level input. This function is enabled when the waveform sequencer enables its input bit.*4
37 to 38	36 to 37	44 to 45	P13 to P14	C	General-purpose I/O ports.
			INT3 to INT4		Can be used as interrupt request input channels 3 to 4. Input is enabled when 1 is set in EN3 to EN4 in standby mode.
39	38	46	P15	C	General-purpose I/O ports.
			INT5		Can be used as interrupt request input channel 5. Input is enabled when 1 is set in EN5 in standby mode.
			TIN0		External clock input pin for reload timer 0.

(Continued)

Pin No.			Pin name	I/O circuit	Function
QFP*2	LQFP*1	SDIP*3			
40	39	47	P16	C	General-purpose I/O ports.
			INT6		Can be used as interrupt request input channels 6. Input is enabled when 1 is set in EN6 in standby mode.
			TO0		Event output pin for reload timer 0.
41	40	48	P17	C	General-purpose I/O ports.
			FRCK		External clock input pin for free-running timer.
42	41	49	P20	F	General-purpose I/O ports.
			TIN1		External clock input pin for reload timer 1.
43	42	50	P21	F	General-purpose I/O ports.
			TO1		Event output pin for reload timer 1.
44	43	51	P22	F	General-purpose I/O ports.
			PWI1		PWC 1 signal input pin.
45	44	52	P23	F	General-purpose I/O ports.
			PWO1		PWC 1 signal output pin.
46 to 49	45 to 48	53 to 56	P24 to P27	F	General-purpose I/O ports.
			IN0 to IN3		Trigger input pins for input capture channels 0 to 3. When input capture channels 0 to 3 are used for input operation, these pins are enabled as required and must not be used for any other I/P.
51 to 56	50 to 55	58 to 63	P30 to P35	G	General-purpose I/O ports.
			RTO0(U) to RTO5(Z)		Waveform generator output pins. These pins output the waveforms specified at the waveform generator. Output is generated when waveform generator output is enabled. (U) to (Z) show the coils that control 3-phase motor.
59	58	2	P36	H	General-purpose I/O ports.
			PPG1*4		Output pins for PPG channels 1. This function is enabled when PPG channels 1 enable output.*4
60	59	3	P37	H	General-purpose I/O ports.
			PPG0		Output pins for PPG channels 0. This function is enabled when PPG channels 0 enable output.
61	60	4	P40	F	General-purpose I/O ports.
			SIN0		Serial data input pin for UART channel 0. While UART channel 0 is operating for input, the input of this pin is used as required and must not be used for any other input.
62	61	5	P41	F	General-purpose I/O ports.
			SOT0		Serial data output pin for UART channel 0. This function is enabled when UART channel 0 enables data output.

(Continued)

Pin No.			Pin name	I/O circuit	Function
QFP*2	LQFP*1	SDIP*3			
63	62	6	P42	F	General-purpose I/O ports.
			SCK0		Serial clock I/O pin for UART channel 0. This function is enabled when UART channel 0 enables clock output.
64	63	7	P43	F	General-purpose I/O ports.
			SNI0*4		Trigger input pins for position detection of the waveform sequencer. When this pin is used for input operation, it is enabled as required and must not be used for any other I/P.*4
1	64	8	P44	F	General-purpose I/O ports.
			SNI1*4		Trigger input pins for position detection of the Multi-pulse generator. When this pin is used for input operation, it is enabled as required and must not be used for any other I/P.*4
2	1	9	P45	F	General-purpose I/O ports.
			SNI2*4		Trigger input pins for position detection of the Multi-pulse generator. When this pin is used for input operation, it is enabled as required and must not be used for any other I/P.*4
3	2	10	P46	F	General-purpose I/O ports.
			PPG2		Output pins for PPG channel 2. This function is enabled when PPG channel 2 enables output.
4 to 11	3 to 10	11 to 18	P50 to P57	I	General-purpose I/O ports.
			AN0 to AN7		A/D converter analog input pins. This function is enabled when the analog input specification is enabled. (ADER) .
12	11	19	AV_{CC}	—	V_{CC} power input pin for analog circuits.
13	12	20	AVR	—	Reference voltage (+) input pin for the A/D converter. This voltage must not exceed V_{CC} and AV_{CC}. Reference voltage (–) is fixed to AV_{SS}.
14	13	21	AV_{SS}	—	V_{SS} power input pin for analog circuits.
15	14	22	P60	F	General-purpose I/O ports.
			SIN1		Serial data input pin for UART channel 1. While UART channel 1 is operating for input, the input of this pin is used as required and must not be used for any other in-put.
16	15	23	P61	F	General-purpose I/O ports.
			SOT1		Serial data output pin for UART channel 1. This function is enabled when UART channel 1 enables data output.

(Continued)

(Continued)

Pin No.			Pin name	I/O circuit	Function
QFP*2	LQFP*1	SDIP*3			
17	16	24	P62	F	General-purpose I/O port.
			SCK1		Serial clock I/O pin for UART channel 1. This function is enabled when UART channel 1 enables clock output.
18	17	25	P63	F	General-purpose I/O port.
			INT7		Usable as interrupt request input channel 7. Input is enabled when 1 is set in EN7 in standby mode.
19	18	26	MD0	J	Input pin for operation mode specification. Connect this pin directly to V_{CC} or V_{SS}.
21, 22	20, 21	28, 29	MD1, MD2	J	Input pin for operation mode specification. Connect this pin directly to V_{CC} or V_{SS}.
25, 50	24, 49	32, 57	V_{SS}	—	Power (0 V) input pin.
57	56	64	V_{CC}	—	Power (5 V) input pin.
58	57	1	C	—	Capacity pin for power stabilization. Please connect to an approximately 0.1 µF ceramic capacitor.

*1 : FPT-64P-M23

*2 : FPT-64P-M06

*3 : DIP-64P-M01

*4 : Pin names not applicable to MB90465 series

■ I/O CIRCUIT TYPE

Classification	Type	Remarks
A	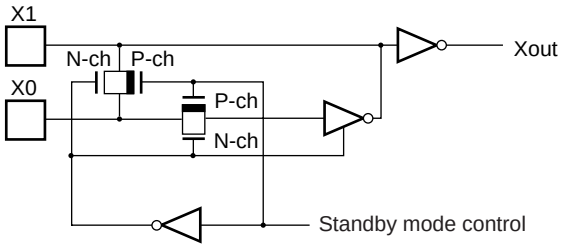	Main clock (main clock crystal oscillator) • At an oscillation feedback resistor of approximately 1 MΩ
B	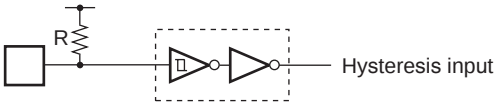	• Hysteresis input • Pull-up resistor approximately 50 kΩ
C	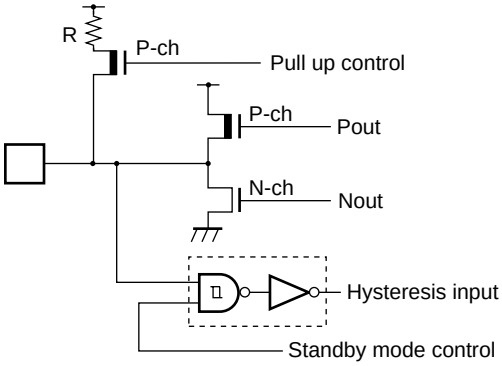	• CMOS output • Hysteresis input • Selectable pull-up resistor approximately 50 kΩ • I_{OL} = 4 mA • Standby control available
D	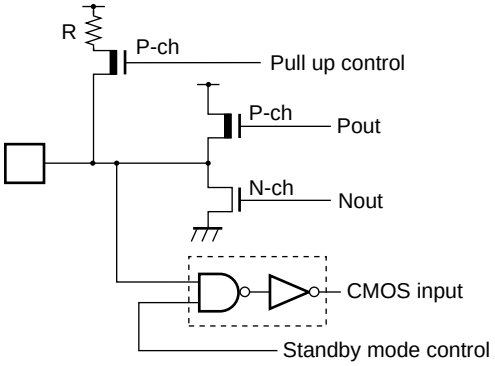	• CMOS output • CMOS input • Selectable pull-up resistor approximately 50 kΩ • Standby control available • I_{OL} = 12 mA

(Continued)

Classification	Type	Remarks
E	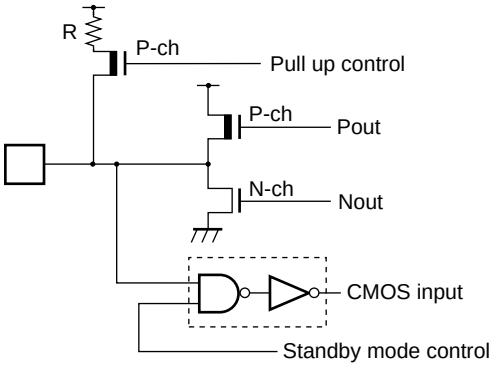	• CMOS output • CMOS input • Selectable pull-up resistor approximately 50 kΩ • Standby control available • I_{OL} = 4 mA
F	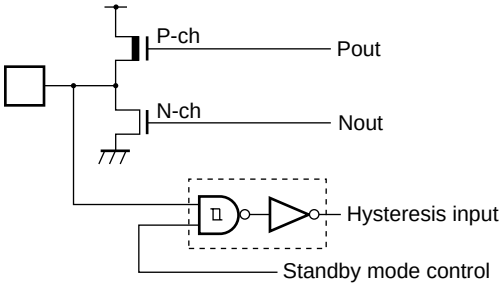	• CMOS output • Hysteresis input • Standby control available • I_{OL} = 4 mA
G	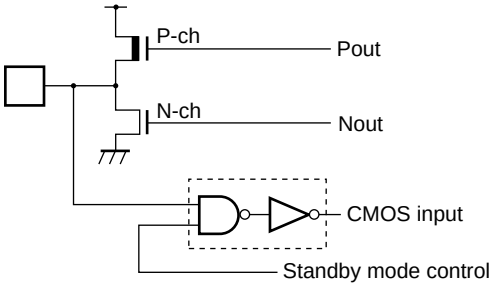	• CMOS output • CMOS input • Standby control available • I_{OL} = 12 mA
H	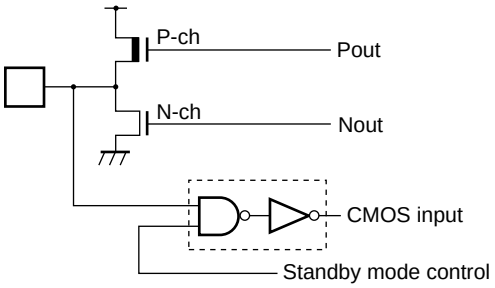	• CMOS output • CMOS input • Standby control available • I_{OL} = 4 mA

(Continued)

(Continued)

Classification	Type	Remarks
I	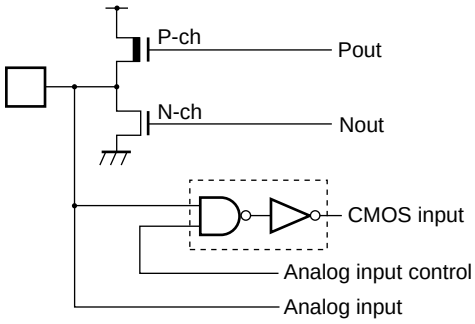	• CMOS output • CMOS input • Analog input • I_{OL} = 4 mA
J	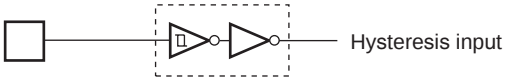	• Hysteresis input

■ HANDLING DEVICES

1. Preventing Latchup

CMOS ICs may cause latchup in the following situations :

- When a voltage higher than V_{CC} or lower than V_{SS} is applied to input or output pins.
- When a voltage exceeding the rating is applied between V_{CC} and V_{SS}.
- When AV_{CC} power is supplied prior to the V_{CC} voltage.

If latchup occurs, the power supply current increases rapidly, sometimes resulting in thermal breakdown of the device. Use meticulous care not to let it occur.

For the same reason, also be careful not to let the analog power-supply voltage exceed the digital power-supply voltage.

2. Handling unused input pins

Unused input pins left open may cause abnormal operation, or latch-up leading to permanent damage. Unused input pins should be pulled up or pulled down through at least 2 kΩ resistance.

Unused input/output pins may be left open in the output state, but if such pins are in the input state they should be handled in the same way as input pins.

3. Use of the external clock

When the device uses an external clock, drive only the X0 pin while leaving the X1 pin open (See the illustration below) .

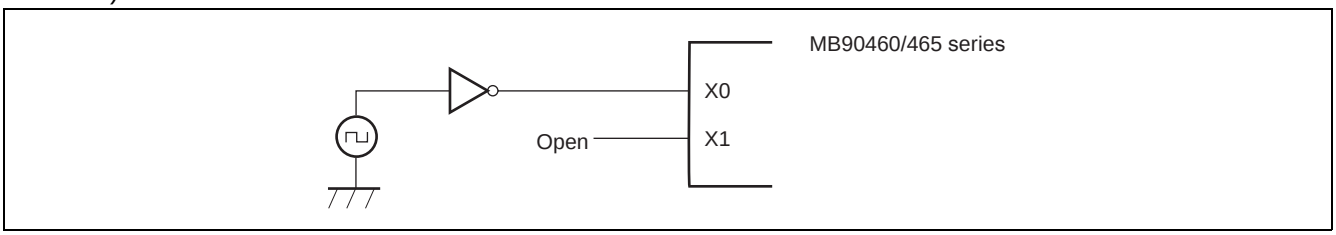

4. Power Supply Pins (V_{CC}/V_{SS})

In products with multiple V_{CC} or V_{SS} pins, the pins of a same potential are internally connected in the device to avoid abnormal operations including latch-up. However, connect the pins external power and ground lines to lower the electro-magnetic emission level to prevent abnormal operation of strobe signals caused by the rise in the ground level, and to conform to the total current rating.

Make sure to connect V_{CC} and V_{SS} pins via the lowest impedance to power lines.

It is recommended to provide a bypass capacitor of around 0.1 µF between V_{CC} and V_{SS} pins near the device.

5. Crystal Oscillator Circuit

Noise around X0 or X1 pins may cause abnormal operations. Make sure to provide bypass capacitors via the shortest distance from X0, X1 pins, crystal oscillator (or ceramic resonator) and ground lines, and make sure, to the utmost effort, that lines of oscillation circuit not cross the lines of other circuits.

It is highly recommended to provide a printed circuit board art work surrounding X0 and X1 pins with the ground area for stabilizing the operation.

6. Turning-on Sequence of Power Supply to A/D Converter and Analog Inputs

Make sure to turn on the A/D converter power supply (AV_{CC}, AV_{SS}, AVR) and analog inputs (AN0 to AN7) after turning-on the digital power supply (V_{CC}) .

Turn-off the digital power after turning off the A/D converter supply and analog inputs. In this case, make sure that the voltage of AVR dose not exceed AV_{CC} (turning on/off the analog and digital power supplies simultaneously is acceptable) .

7. Connection of Unused Pins of A/D Converter

Connect unused pin of A/D converter to $AV_{CC} = V_{CC}$, $AV_{SS} = AVR = V_{SS}$.

8. N.C. Pin

The N.C. (internally connected) pin must be opened for use.

9. Notes on Energization

To prevent the internal regulator circuit from malfunctioning, set the voltage rise time during energization at 50 µs or more.

10. Initialization

In the device, there are internal registers which are initialized only by a power-on reset. To initialize these registers, please turn on the power again.

11. Return from standby state

If the power-supply voltage goes below the standby RAM holding voltage in the standby state, the device may fail to return from the standby state. In this case, reset the device via the external reset pin to return to the normal state.

■ BLOCK DIAGRAM

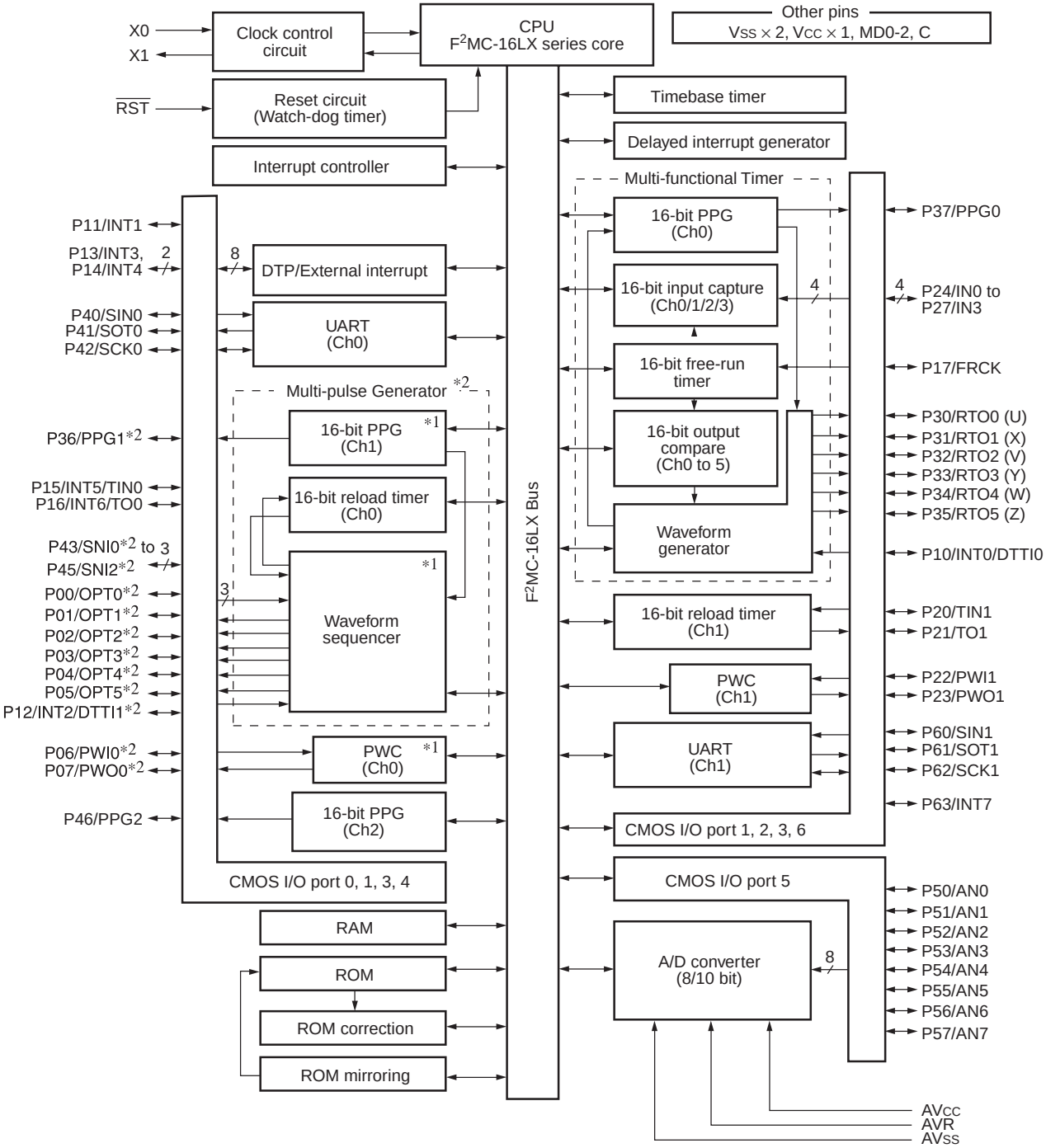

Note : P00 to P07 (8 channels) : With registers that can be used as input pull-up resistors
P10 to P17 (8 channels) : With registers that can be used as input pull-up resistors

*1: Not present in MB90465 series

*2: Resource function for these pins are not applicable to MB90465 series

■ MEMORY MAP

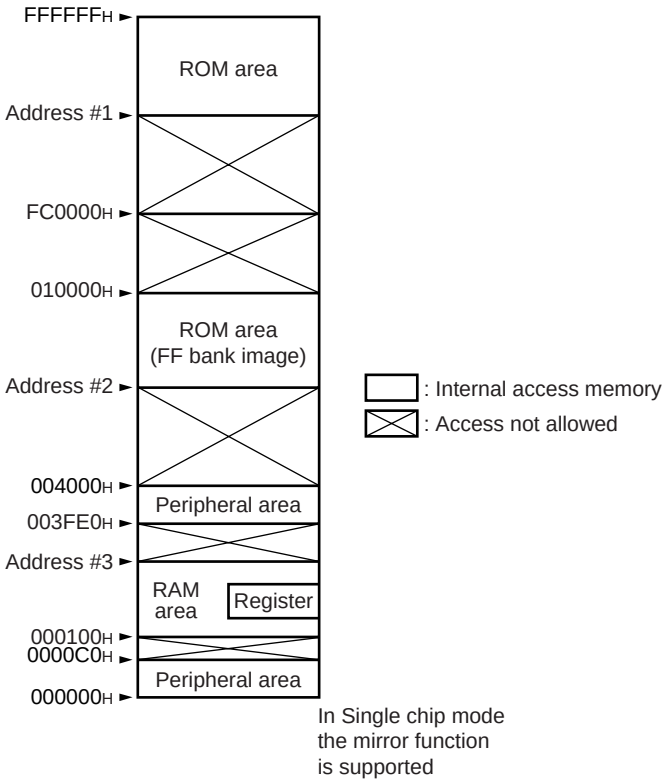

Parts No.	Address#1	Address#2	Address#3
MB90462/467	FF0000H	004000H	000900H
MB90F462	FF0000H	004000H	000900H
MB90F462A	FF0000H	004000H	000900H
MB90F463A	FE0000H	004000H	000900H
MB90V460	(FF0000H)	004000H	002100H

Note : The ROM data of bank FF is reflected in the upper address of bank 00, realizing effective use of the C compiler small model. The lower 16-bit is assigned to the same address, enabling reference of the table on the ROM without stating “far”. For example, if an attempt has been made to access 00C000H , the contents of the ROM at FFC000H are accessed actually. Since the ROM area of the FF bank exceeds 48 Kbytes, the whole area cannot be reflected in the image for the 00 bank. The ROM data at FF4000H to FFFFFFH looks, therefore, as if it were the image for 004000H to 00FFFFH. Thus, it is recommended that the ROM data table be stored in the area of FF4000H to FFFFFFH.

■ I/O MAP

Address	Abbreviation	Register	Byte access	Word access	Resource name	Initial value
000000_H	PDR0	Port 0 data register	R/W	R/W	Port 0	XXXXXXXX_B
000001_H	PDR1	Port 1 data register	R/W	R/W	Port 1	XXXXXXXX_B
000002_H	PDR2	Port 2 data register	R/W	R/W	Port 2	XXXXXXXX_B
000003_H	PDR3	Port 3 data register	R/W	R/W	Port 3	XXXXXXXX_B
000004_H	PDR4	Port 4 data register	R/W	R/W	Port 4	$-XXXXXXX_B$
000005_H	PDR5	Port 5 data register	R/W	R/W	Port 5	XXXXXXXX_B
000006_H	PDR6	Port 6 data register	R/W	R/W	Port 6	$----XXXX_B$
000007_H	Prohibited area					
000008_H	PWCSL0	PWC control status register CH0	R/W	R/W	PWC timer* (CH0)	00000000_B
000009_H	PWCSH0		R/W	R/W		00000000_B
$00000A_H$	PWC0	PWC data buffer register CH0	—	R/W		XXXXXXXX_B
$00000B_H$						XXXXXXXX_B
$00000C_H$	DIV0	Divide ratio control register CH0	R/W	R/W		$------00_B$
$00000D_H$ to $0F_H$	Prohibited area					
000010_H	DDR0	Port 0 direction register	R/W	R/W	Port 0	00000000_B
000011_H	DDR1	Port 1 direction register	R/W	R/W	Port 1	00000000_B
000012_H	DDR2	Port 2 direction register	R/W	R/W	Port 2	00000000_B
000013_H	DDR3	Port 3 direction register	R/W	R/W	Port 3	00000000_B
000014_H	DDR4	Port 4 direction register	R/W	R/W	Port 4	-0000000_B
000015_H	DDR5	Port 5 direction register	R/W	R/W	Port 5	00000000_B
000016_H	DDR6	Port 6 direction register	R/W	R/W	Port 6	$----0000_B$
000017_H	ADER	Analog input enable register	R/W	R/W	Port 5, A/D	11111111_B
000018_H	Prohibited area					
000019_H	CDCR0	Clock division control register 0	R/W	R/W	Communication prescaler 0	$0---0000_B$
$00001A_H$	Prohibited area					
$00001B_H$	CDCR1	Clock division control register 1	R/W	R/W	Communication prescaler 1	$0---0000_B$
$00001C_H$	RDR0	Port 0 pull-up resistor setting register	R/W	R/W	Port 0	00000000_B
$00001D_H$	RDR1	Port 1 pull-up resistor setting register	R/W	R/W	Port 1	00000000_B
$00001E_H$ to $1F_H$	Prohibited area					

(Continued)

Address	Abbreviation	Register	Byte access	Word access	Resource name	Initial value
000020H	SMR0	Serial mode register 0	R/W	R/W	UART0	00000000B
000021H	SCR0	Serial control register 0	R/W	R/W		00000100B
000022H	SIDR0 / SODR0	Input data register 0 / output data register 0	R/W	R/W		XXXXXXXXB
000023H	SSR0	Serial status register 0	R/W	R/W		00001000B
000024H	SMR1	Serial mode register 1	R/W	R/W	UART1	00000000B
000025H	SCR1	Serial control register 1	R/W	R/W		00000100B
000026H	SIDR1 / SODR1	Input data register 1 / output data register 1	R/W	R/W		XXXXXXXXB
000027H	SSR1	Status register 1	R/W	R/W		00001000B
000028H	PWCSL1	PWC control status register CH1	R/W	R/W	PWC timer (CH1)	00000000B
000029H	PWCSH1		R/W	R/W		00000000B
00002AH	PWC1	PWC data buffer register CH1	—	R/W		XXXXXXXXB
00002BH						XXXXXXXXB
00002CH	DIV1	Divide ratio control register CH1	R/W	R/W		------00B
00002DH to 2FH	Prohibited area					
000030H	ENIR	Interrupt / DTP enable register	R/W	R/W	DTP/external interrupt	00000000B
000031H	EIRR	Interrupt / DTP cause register	R/W	R/W		XXXXXXXXB
000032H	ELVRL	Request level setting register (Lower Byte)	R/W	R/W		00000000B
000033H	ELVRH	Request level setting register (Higher Byte)	R/W	R/W		00000000B
000034H	ADCS0	A/D control status register 0	R/W	R/W	8/10-bit A/D converter	00000000B
000035H	ADCS1	A/D control status register 1	R/W	R/W		00000000B
000036H	ADCR0	A/D data register 0	R	R		XXXXXXXXB
000037H	ADCR1	A/D data register 1	R/W	R/W		00000-XXB
000038H	PDCR0	PPG0 down counter register	—	R	16-bit PPG timer (CH0)	11111111B
000039H						11111111B
00003AH	PCSR0	PPG0 period setting register	—	W		XXXXXXXXB
00003BH						XXXXXXXXB
00003CH	PDUT0	PPG0 duty setting register	—	W		XXXXXXXXB
00003DH						XXXXXXXXB
00003EH	PCNTL0	PPG0 control status register	R/W	R/W		--000000B
00003FH	PCNTH0		R/W	R/W		00000000B

(Continued)

Address	Abbreviation	Register	Byte access	Word access	Resource name	Initial value
000040H	PDCR1	PPG1 down counter register	—	R	16-bit PPG timer (CH1) *	11111111B
000041H						11111111B
000042H	PCSR1	PPG1 period setting register	—	W		XXXXXXXXB
000043H						XXXXXXXXB
000044H	PDUT1	PPG1 duty setting register	—	W		XXXXXXXXB
000045H						XXXXXXXXB
000046H	PCNTL1	PPG1 control status register	R/W	R/W		--000000B
000047H	PCNTH1		R/W	R/W		00000000B
000048H	PDCR2	PPG2 down counter register	—	R	16-bit PPG timer (CH2)	11111111B
000049H						11111111B
00004AH	PCSR2	PPG2 period setting register	—	W		XXXXXXXXB
00004BH						XXXXXXXXB
00004CH	PDUT2	PPG2 duty setting register	—	W		XXXXXXXXB
00004DH						XXXXXXXXB
00004EH	PCNTL2	PPG2 control status register	R/W	R/W		--000000B
00004FH	PCNTH2		R/W	R/W		00000000B
000050H	TMRR0	16-bit timer register 0	—	R/W	Multi Function Timer (Waveform generator)	XXXXXXXXB
000051H						XXXXXXXXB
000052H	TMRR1	16-bit timer register 1	—	R/W		XXXXXXXXB
000053H						XXXXXXXXB
000054H	TMRR2	16-bit timer register 2	—	R/W		XXXXXXXXB
000055H						XXXXXXXXB
000056H	DTCR0	16-bit timer control register 0	R/W	R/W		00000000B
000057H	DTCR1	16-bit timer control register 1	R/W	R/W		00000000B
000058H	DTCR2	16-bit timer control register 2	R/W	R/W		00000000B
000059H	SIGCR	Waveform control register	R/W	R/W		00000000B
00005AH	CPCLRB / CPCLR	Compare clear buffer register / Compare clear register (lower)	—	R/W	16-bit free-running timer	11111111B
00005BH						11111111B
00005CH	TCDT	Timer data register (lower)	—	R/W		00000000B
00005DH						00000000B
00005EH	TCCSL	Timer control status register (lower)	R/W	R/W		00000000B
00005FH	TCCSH	Timer control status register (upper)	R/W	R/W		-0000000B

(Continued)

Address	Abbreviation	Register	Byte access	Word access	Resource name	Initial value
000060H	IPCP0	Input capture data register CH0	—	R	16-bit input capture (CH0 to CH3)	XXXXXXXXB
000061H						XXXXXXXXB
000062H	IPCP1	Input capture data register CH1	—	R		XXXXXXXXB
000063H						XXXXXXXXB
000064H	IPCP2	Input capture data register CH2	—	R		XXXXXXXXB
000065H						XXXXXXXXB
000066H	IPCP3	Input capture data register CH3	—	R		XXXXXXXXB
000067H						XXXXXXXXB
000068H	PICSL01	PPG output control / Input capture control status register 01 (lower)	R/W	R/W		00000000B
000069H	PICSH01	PPG output control / Input capture control status register 01 (upper)	R/W	R/W		00000000B
00006AH	ICSL23	Input capture control status register 23 (lower)	R/W	R/W		00000000B
00006BH	ICSH23	Input capture control status register 23 (upper)	R	R		------00B
00006CH to 6EH	Prohibited area					
00006FH	ROMM	ROM mirroring function selection register	W	W	ROM mirroring function	-------1B
000070H	OCCPB0/ OCCP0	Output compare buffer register 0/ output compare register 0	—	R/W	Output compare (CH0 to CH5)	XXXXXXXXB
000071H						XXXXXXXXB
000072H	OCCPB1/ OCCP1	Output compare buffer register 1/ output compare register 1	—	R/W		XXXXXXXXB
000073H						XXXXXXXXB
000074H	OCCPB2/ OCCP2	Output compare buffer register 2/ output compare register 2	—	R/W		XXXXXXXXB
000075H						XXXXXXXXB
000076H	OCCPB3/ OCCP3	Output compare buffer register 3/ output compare register 3	—	R/W		XXXXXXXXB
000077H						XXXXXXXXB
000078H	OCCPB4/ OCCP4	Output compare buffer register 4/ output compare register 4	—	R/W		XXXXXXXXB
000079H						XXXXXXXXB
00007AH	OCCPB5/ OCCP5	Output compare buffer register 5/ output compare register 5	—	R/W		XXXXXXXXB
00007BH						XXXXXXXXB

(Continued)

Address	Abbreviation	Register	Byte access	Word access	Resource name	Initial value
00007C$_H$	OCS0	Compare control register 0	R/W	R/W	Output compare (CH0 to CH5)	00000000$_B$
00007D$_H$	OCS1	Compare control register 1	R/W	R/W		-0000000$_B$
00007E$_H$	OCS2	Compare control register 2	R/W	R/W		00000000$_B$
00007F$_H$	OCS3	Compare control register 3	R/W	R/W		-0000000$_B$
000080$_H$	OCS4	Compare control register 4	R/W	R/W		00000000$_B$
000081$_H$	OCS5	Compare control register 5	R/W	R/W		-0000000$_B$
000082$_H$	TMCSRL0	Timer control status register CH0 (lower)	R/W	R/W	16-bit reload timer (CH0)	00000000$_B$
000083$_H$	TMCSRH0	Timer control status register CH0 (upper)	R/W	R/W		----0000$_B$
000084$_H$	TMR0 / TMRD0	16 bit timer register CH0 / 16-bit reload register CH0	—	R/W		XXXXXXXX$_B$
000085$_H$						XXXXXXXX$_B$
000086$_H$	TMCSRL1	Timer control status register CH1 (lower)	R/W	R/W	16-bit reload timer (CH1)	00000000$_B$
000087$_H$	TMCSRH1	Timer control status register CH1 (upper)	R/W	R/W		----0000$_B$
000088$_H$	TMR1 / TMRD1	16 bit timer register CH1 / 16-bit reload register CH1	—	R/W		XXXXXXXX$_B$
000089$_H$						XXXXXXXX$_B$
00008A$_H$	OPCLR	Output control lower register	R/W	R/W	Waveform* sequencer	00000000$_B$
00008B$_H$	OPCUR	Output control upper register	R/W	R/W		00000000$_B$
00008C$_H$	IPCLR	Input control lower register	R/W	R/W		00000000$_B$
00008D$_H$	IPCUR	Input control upper register	R/W	R/W		00000000$_B$
00008E$_H$	TCSR	Timer control status register	R/W	R/W		00000000$_B$
00008F$_H$	NCCR	Noise cancellation control register	R/W	R/W		00000000$_B$
000090$_H$ to 9D$_H$	Prohibited area					
00009E$_H$	PACSR	Program address detect control status register	R/W	R/W	Rom correction	00000000$_B$
00009F$_H$	DIRR	Delayed interrupt cause / clear register	R/W	R/W	Delayed interrupt	-------0$_B$
0000A0$_H$	LPMCR	Low-power consumption mode register	R/W	R/W	Low-power consumption control register	00011000$_B$
0000A1$_H$	CKSCR	Clock selection register	R/W	R/W		11111100$_B$
0000A2$_H$ to A7$_H$	Prohibited area					
0000A8$_H$	WDTC	Watchdog control register	R/W	R/W	Watchdog timer	X-XXX111$_B$
0000A9$_H$	TBTC	Timebase timer control register	R/W	R/W	Timebase timer	1--00100$_B$

(Continued)

Address	Abbrevia-tion	Register	Byte access	Word access	Resource name	Initial value
0000AA$_H$ to AD$_H$	Prohibited area					
0000AE$_H$	FMCS	Flash memory control status register	R/W	R/W	Flash memory interface circuit	00010000$_B$
0000AF$_H$	Prohibited area					
0000B0$_H$	ICR00	Interrupt control register 00	R/W	R/W	Interrupt controller	00000111$_B$
0000B1$_H$	ICR01	Interrupt control register 01	R/W	R/W		00000111$_B$
0000B2$_H$	ICR02	Interrupt control register 02	R/W	R/W		00000111$_B$
0000B3$_H$	ICR03	Interrupt control register 03	R/W	R/W		00000111$_B$
0000B4$_H$	ICR04	Interrupt control register 04	R/W	R/W		00000111$_B$
0000B5$_H$	ICR05	Interrupt control register 05	R/W	R/W		00000111$_B$
0000B6$_H$	ICR06	Interrupt control register 06	R/W	R/W		00000111$_B$
0000B7$_H$	ICR07	Interrupt control register 07	R/W	R/W		00000111$_B$
0000B8$_H$	ICR08	Interrupt control register 08	R/W	R/W		00000111$_B$
0000B9$_H$	ICR09	Interrupt control register 09	R/W	R/W		00000111$_B$
0000BA$_H$	ICR10	Interrupt control register 10	R/W	R/W		00000111$_B$
0000BB$_H$	ICR11	Interrupt control register 11	R/W	R/W		00000111$_B$
0000BC$_H$	ICR12	Interrupt control register 12	R/W	R/W		00000111$_B$
0000BD$_H$	ICR13	Interrupt control register 13	R/W	R/W		00000111$_B$
0000BE$_H$	ICR14	Interrupt control register 14	R/W	R/W		00000111$_B$
0000BF$_H$	ICR15	Interrupt control register 15	R/W	R/W		00000111$_B$
0000C0$_H$ to FF$_H$	External area					
001FF0$_H$	PADR0L	Program address detection register 0 (Lower Byte)	R/W	R/W	Rom correction	XXXXXXXX$_B$
001FF1$_H$	PADR0M	Program address detection register 0 (Middle Byte)	R/W	R/W		XXXXXXXX$_B$
001FF2$_H$	PADR0H	Program address detection register 0 (Higher Byte)	R/W	R/W		XXXXXXXX$_B$
001FF3$_H$	PADR1L	Program address detection register 1 (Lower Byte)	R/W	R/W		XXXXXXXX$_B$
001FF4$_H$	PADR1M	Program address detection register 1 (Middle Byte)	R/W	R/W		XXXXXXXX$_B$
001FF5$_H$	PADR1H	Program address detection register 1 (Higher Byte)	R/W	R/W		XXXXXXXX$_B$

(Continued)

(Continued)

Address	Abbreviation	Register	Byte access	Word access	Resource name	Initial value
003FE0H	OPDBR0	Output data buffer register 0	—	R/W	Waveform* sequencer	00000000B
003FE1H						00000000B
003FE2H	OPDBR1	Output data buffer register 1	—	R/W		00000000B
003FE3H						00000000B
003FE4H	OPDBR2	Output data buffer register 2	—	R/W		00000000B
003FE5H						00000000B
003FE6H	OPDBR3	Output data buffer register 3	—	R/W		00000000B
003FE7H						00000000B
003F78H	OPDBR4	Output data buffer register 4	—	R/W		00000000B
003FE9H						00000000B
003FEAH	OPDBR5	Output data buffer register 5	—	R/W		00000000B
003FEBH						00000000B
003FECH	OPEBR6	Output data buffer register 6	—	R/W		00000000B
003FEDH						00000000B
003FEEH	OPEBR7	Output data buffer register 7	—	R/W		00000000B
003FEFH						00000000B
003FF0H	OPEBR8	Output data buffer register 8	—	R/W		00000000B
003FF1H						00000000B
003FF2H	OPEBR9	Output data buffer register 9	—	R/W		00000000B
003FF3H						00000000B
003FF4H	OPEBRA	Output data buffer register A	—	R/W		00000000B
003FF5H						00000000B
003FF6H	OPEBRB	Output data buffer register B	—	R/W		00000000B
003FF7H						00000000B
003FF8H	OPDR	Output data register	—	R		XXXXXXXXB
003FF9H						0000XXXXB
003FFAH	CPCR	Compare clear register	—	R/W		XXXXXXXXB
003FFBH						XXXXXXXXB
003FFCH	TMBR	Timer buffer register	—	R		00000000B
003FFDH						00000000B
003FFEH to 003FFFH	Prohibited area					

- Meaning of abbreviations used for reading and writing

R/W : Read and write enabled
R : Read only
W : Write only

- Explanation of initial values

0 : The bit is initialized to 0.
1 : The bit is initialized to 1.
X : The initial value of the bit is undefined.
- : The bit is not used. Its initial value is undefined.

The Instruction using IO addressing e.g. MOV A, io, is not supported for registers area $003FE0_H$ to $003FFF_H$.

Note : For bits that is initialized by an reset operation, the initial value set by the reset operation is listed as an initial value. Note that the values are different from reading results.
For LPMCR/CKSCR/WDTC, there are cases where initialization is performed or not performed, depending on the types of the reset. However, initial value for resets that initializes the value is listed.

*: These registers are not present in MB90465 series

■ INTERRUPT FACTORS, INTERRUPT VECTORS, INTERRUPT CONTROL REGISTER

Interrupt cause	EI²OS support	Interrupt vector			Interrupt control register		Priority *2
		Number		Address	ICR	Address	
Reset	×	#08	08_H	$FFFFDC_H$	—	—	High
INT9 instruction	×	#09	09_H	$FFFFD8_H$	—	—	↑
Exception processing	×	#10	$0A_H$	$FFFFD4_H$	—	—	
A/D converter conversion termination	○	#11	$0B_H$	$FFFFD0_H$	ICR00	$0000B0_H$ *1	
Output compare channel 0 match	○	#12	$0C_H$	$FFFFCC_H$			
End of measurement by PWC0 timer / PWC0 timer overflow*3	○	#13	$0D_H$	$FFFFC8_H$	ICR01	$0000B1_H$ *1	
16-bit PPG timer 0	○	#14	$0E_H$	$FFFFC4_H$			
Output compare channel 1 match3	○	#15	$0F_H$	$FFFFC0_H$	ICR02	$0000B2_H$ *1	
16-bit PPG timer 1*3	○	#16	10_H	$FFFFBC_H$			
Output compare channel 2 match	○	#17	11_H	$FFFFB8_H$	ICR03	$0000B3_H$ *1	
16-bit reload timer 1 underflow	○	#18	12_H	$FFFFB4_H$			
Output compare channel 3 match	○	#19	13_H	$FFFFB0_H$	ICR04	$0000B4_H$ *1	
DTP/ext. interrupt channels 0/1 detection	○	#20	14_H	$FFFFAC_H$			
DTTI0	Δ						
Output compare channel 4 match	○	#21	15_H	$FFFFA8_H$	ICR05	$0000B5_H$ *2	
DTP/ext. interrupt channels 2/3 detection	○	#22	16_H	$FFFFA4_H$			
DTTI1*3	Δ						
Output compare channel 5 match	○	#23	17_H	$FFFFA0_H$	ICR06	$0000B6_H$ *1	
End of measurement by PWC1 timer / PWC1 timer overflow	○	#24	18_H	$FFFF9C_H$			
DTP/ext. interrupt channels 4/5 detection	○	#25	19_H	$FFFF98_H$	ICR07	$0000B7_H$ *1	
Waveform sequencer timer compare match / write timing*3	○	#26	$1A_H$	$FFFF94_H$			
DTP/ext. interrupt channels 6/7 detection	○	#27	$1B_H$	$FFFF90_H$	ICR08	$0000B8_H$ *1	
Waveform sequencer position detect / compare interrupt*3	○	#28	$1C_H$	$FFFF8C_H$			
Waveform generator 16-bit timer 0/1/2 underflow	Δ	#29	$1D_H$	$FFFF88_H$	ICR09	$0000B9_H$ *1	
16-bit reload timer 0 underflow	○	#30	$1E_H$	$FFFF84_H$			
16-bit free-running timer zero detect	Δ	#31	$1F_H$	$FFFF80_H$	ICR10	$0000BA_H$ *1	
16-bit PPG timer 2	○	#32	20_H	$FFFF7C_H$			
Input capture channels 0/1	○	#33	21_H	$FFFF78_H$	ICR11	$0000BB_H$ *1	
16-bit free-running timer compare clear	Δ	#34	22_H	$FFFF74_H$			

(Continued)

(Continued)

Interrupt cause	EI2OS support	Interrupt vector			Interrupt control register		Priority *2
		Number		Address	ICR	Address	
Input capture channels 2/3	○	#35	23_H	$FFFF70_H$	ICR12	$0000BC_H$ *1	↓
Timebase timer	Δ	#36	24_H	$FFFF6C_H$			
UART1 receive	◎	#37	25_H	$FFFF68_H$	ICR13	$0000BD_H$ *1	
UART1 send	Δ	#38	26_H	$FFFF64_H$			
UART0 receive	◎	#39	27_H	$FFFF60_H$	ICR14	$0000BE_H$ *1	
UART0 send	Δ	#40	28_H	$FFFF5C_H$			
Flash memory status	Δ	#41	29_H	$FFFF58_H$	ICR15	$0000BF_H$ *1	
Delayed interrupt generator module	Δ	#42	$2A_H$	$FFFF54_H$			Low

◎ : Can be used and support the EI^2OS stop request.
○ : Can be used and interrupt request flag is cleared by EI^2OS interrupt clear signal.
× : Cannot be used.
Δ : Usable when an interrupt cause that shares the ICR is not used.

*1: - For peripheral functions that share the ICR register, the interrupt level will be the same.
- If the extended intelligent I/O service is to be used with a peripheral function that shares the ICR register with another peripheral function, the service can be started by either of the function. And if EI^2OS clear is supported, both interrupt request flags for the two interrupt causes are cleared by EI^2OS interrupt clear signal. It is recommended to mask either of the interrupt request during the use of EI^2OS.
- EI^2OS service cannot be started multiple times simultaneously. Interrupt other than the operating interrupt is masked during EI^2OS operation. It is recommended to mask either of the interrupt requests during the use of EI^2OS.

*2: This priority is applied when interrupts of the same level occur simultaneously.
*3: In MB90465 series, these resources are not present, and therefore the interrupts are not available.

■ PERIPHERAL RESOURCES

1. Low-Power Consumption Control Circuit

The MB90460/465 series has the following CPU operating mode configured by selection of an operating clock and clock operation control.

- Clock mode
  PLL clock mode : A PLL clock that is a multiple of the oscillation clock (HCLK) frequency is used to operate the CPU and peripheral functions.
  Main clock mode : The main clock, with a frequency one-half that of the oscillation clock (HCLK) , is used to operate the CPU and peripheral functions. In main clock mode, the PLL multiplier circuit is inactive.
- CPU intermittent operation mode
  CPU intermittent operation mode causes the CPU to operate intermittently, while high-speed clock pulses are supplied to peripheral functions, reducing power consumption. In CPU intermittent operation mode, intermittent clock pulses are only applied to the CPU when it is accessing a register, internal memory, a peripheral function, or an external unit.
- Standby mode
  In standby mode, the low power consumption control circuit stops supplying the clock to the CPU (sleep mode) or the CPU and peripheral functions (timebase timer mode) , or stops the oscillation clock itself (stop mode) , reducing power consumption.
  - PLL sleep mode
    PLL sleep mode is activated to stop the CPU operating clock when the microcontroller enters PLL clock mode; other components continue to operate on the PLL clock.
  - Main sleep mode
    Main sleep mode is activated to stop the CPU operating clock when the microcontroller enters main clock mode; other components continue to operate on the main clock.
  - PLL timebase timer mode
    PLL timebase timer mode causes microcontroller operation, with the exception of the oscillation clock, PLL clock and timebase timer, to stop. All functions other than the timebase timer are deactivated.
  - Main timebase timer mode
    Main timebase timer mode causes microcontroller operation, with the exception of the oscillation clock, main clock and the timebase timer, to stop. All functions other than the timebase timer are deactivated.
  - Stop mode
    Stop mode causes the source oscillation to stop. All functions are deactivated.

Block Diagram

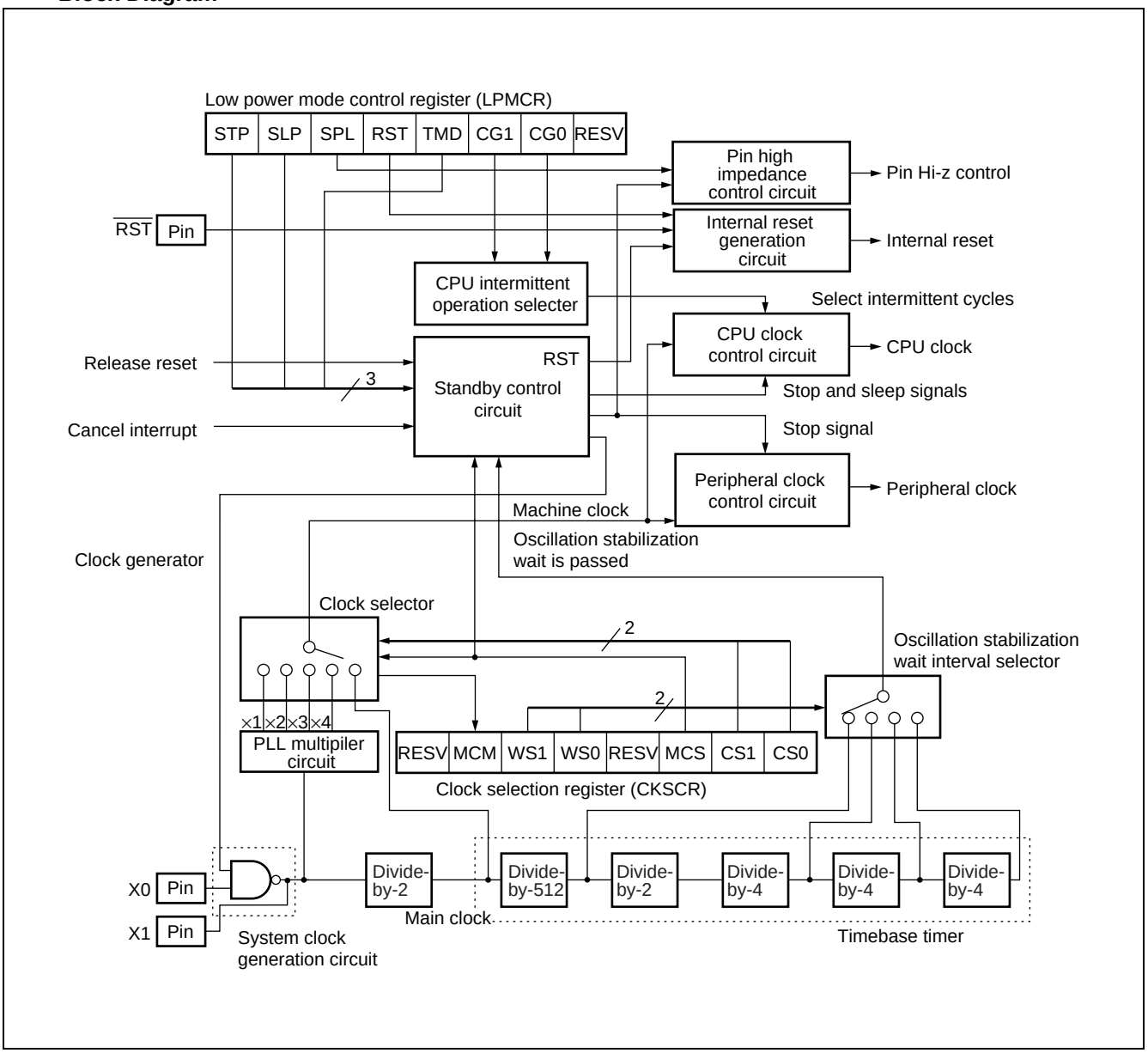

2. I/O Ports

(1) Outline of I/O ports

When a data register serving for control output is read, the data output from it as a control output is read regardless of the value in the direction register. Note that, if a read-modify-write instruction (such as a bit set instruction) is used to preset output data in the data register when changing its setting from input to output, the data read is not the data register latched value but the input data from the pin.

Ports 0 to 4 and 6 are input/output ports which serve as inputs when the direction register value is “0” or as outputs when the value is “1”.

Port 5 are input/output ports as other port when ADER is 00_H.

Block Diagram

- Block diagram of Port 0 pins

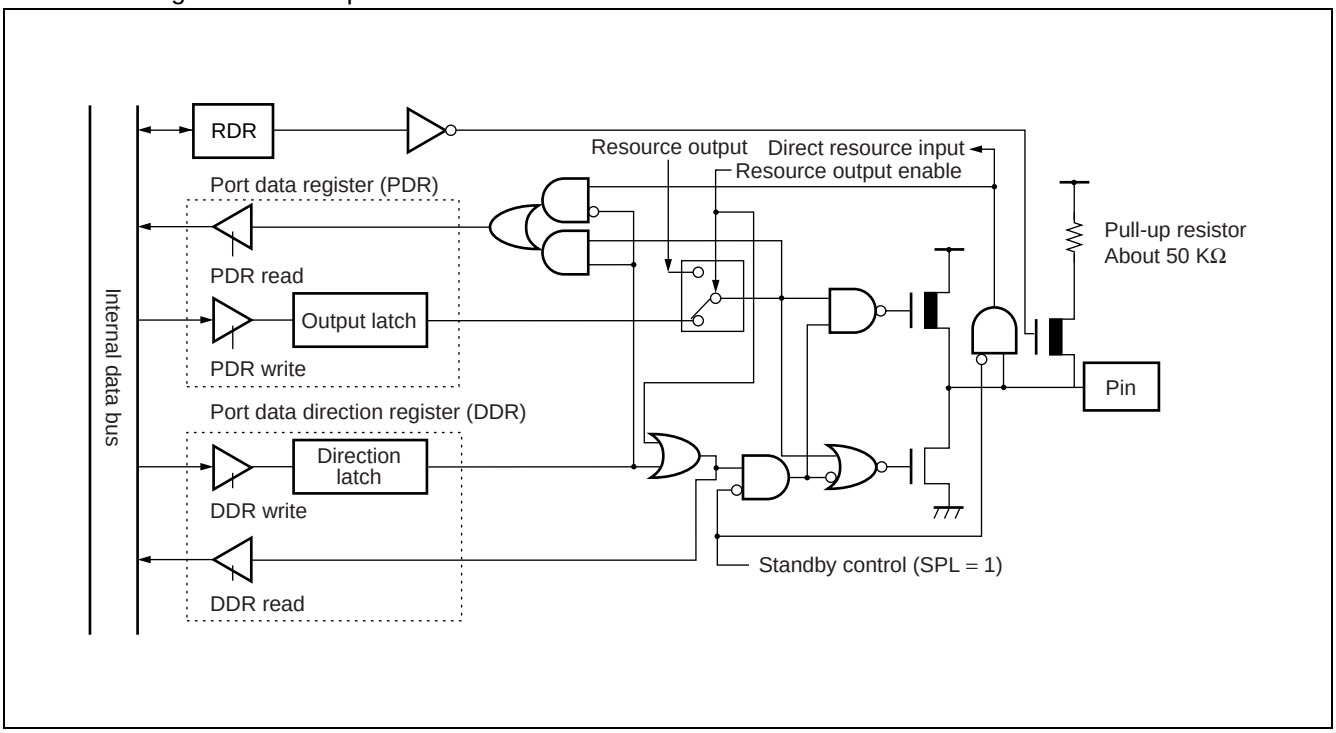

(Continued)

- Block diagram of Port 1 pins

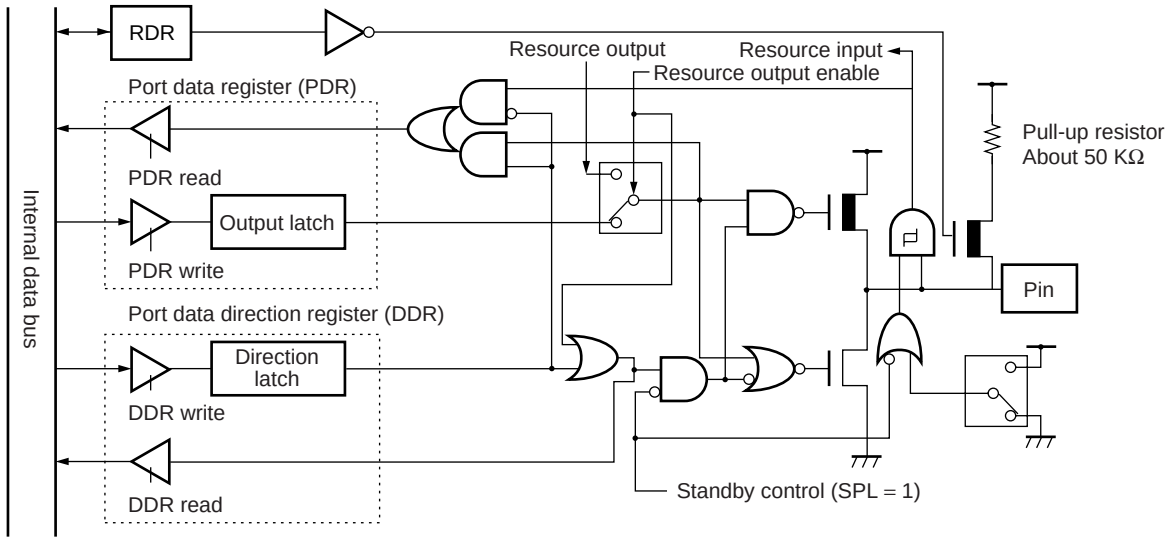

- Block diagram of Port 2 pins

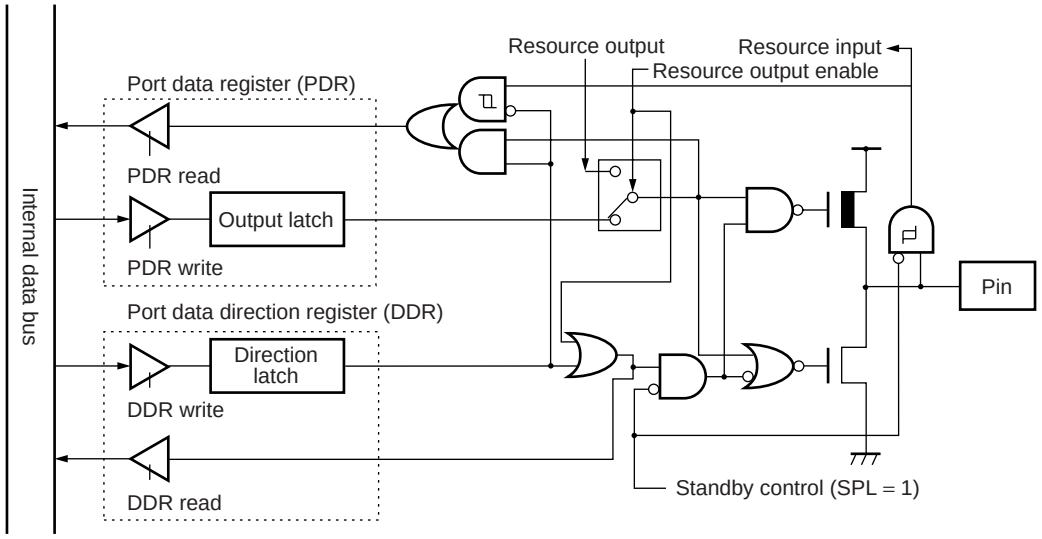

(Continued)

- Block diagram of Port 3 pins

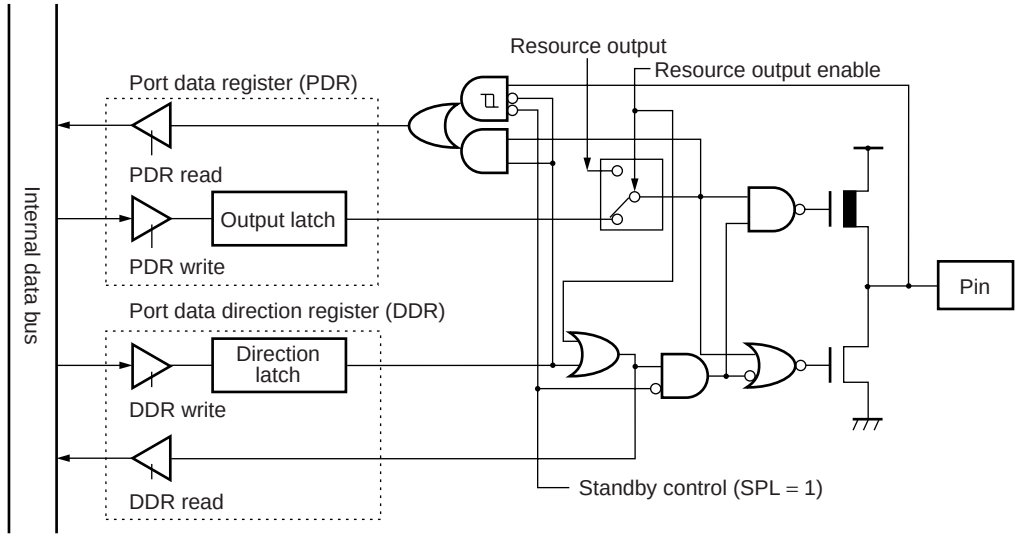

- Block diagram of Port 4 pins

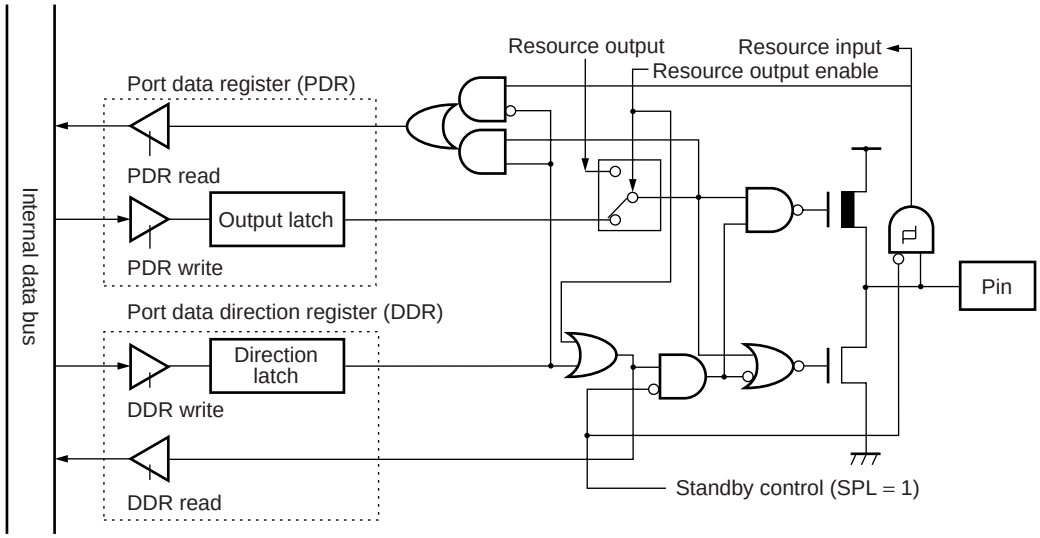

(Continued)

(Continued)

- Block diagram of Port 5 pins

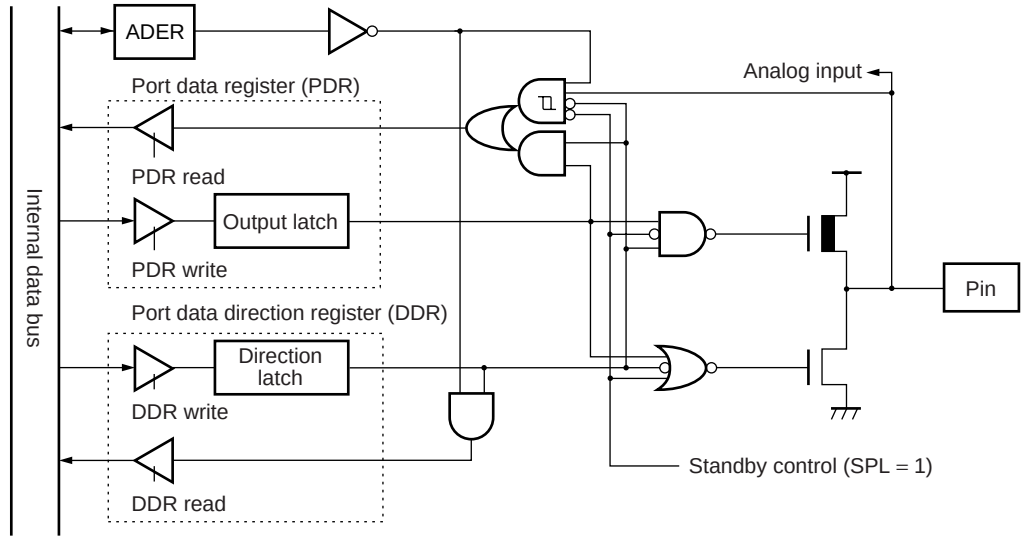

- Block diagram of Port 6 pins

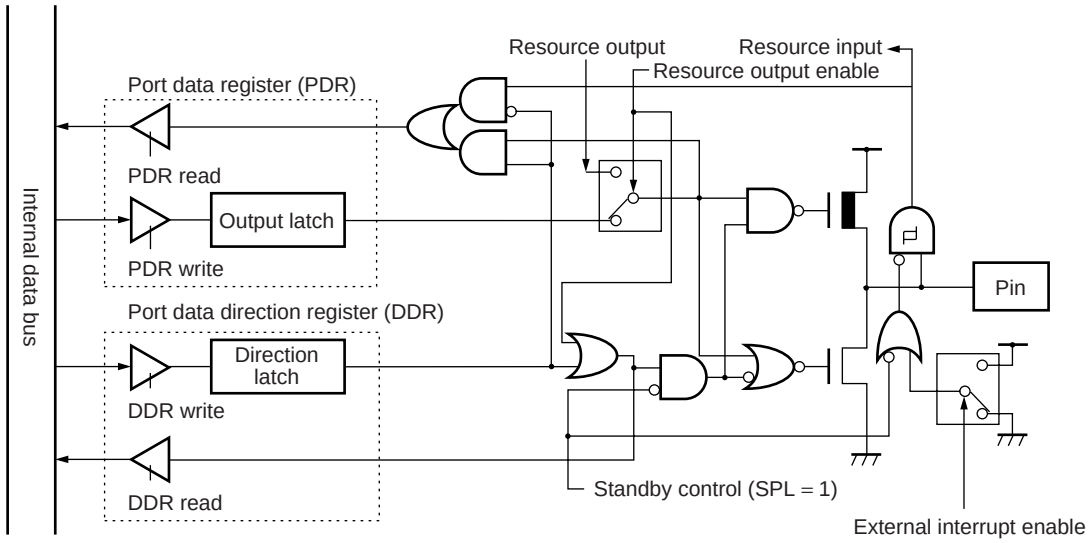

3. Timebase Timer

The timebase timer is an 18-bit free-running counter (timebase counter) that counts up in synchronization to the internal count clock (main oscillator clock divided by 2) .

Features of timebase timer :

- Interrupt generated when counter overflow
- EI²OS supported
- Interval timer function :
  An interrupt generated at four different time intervals
- Clock supply function :
  Four different clocks can be selected as a watchdog timer's count clock
  Supply clock for oscillation stabilization

Block Diagram

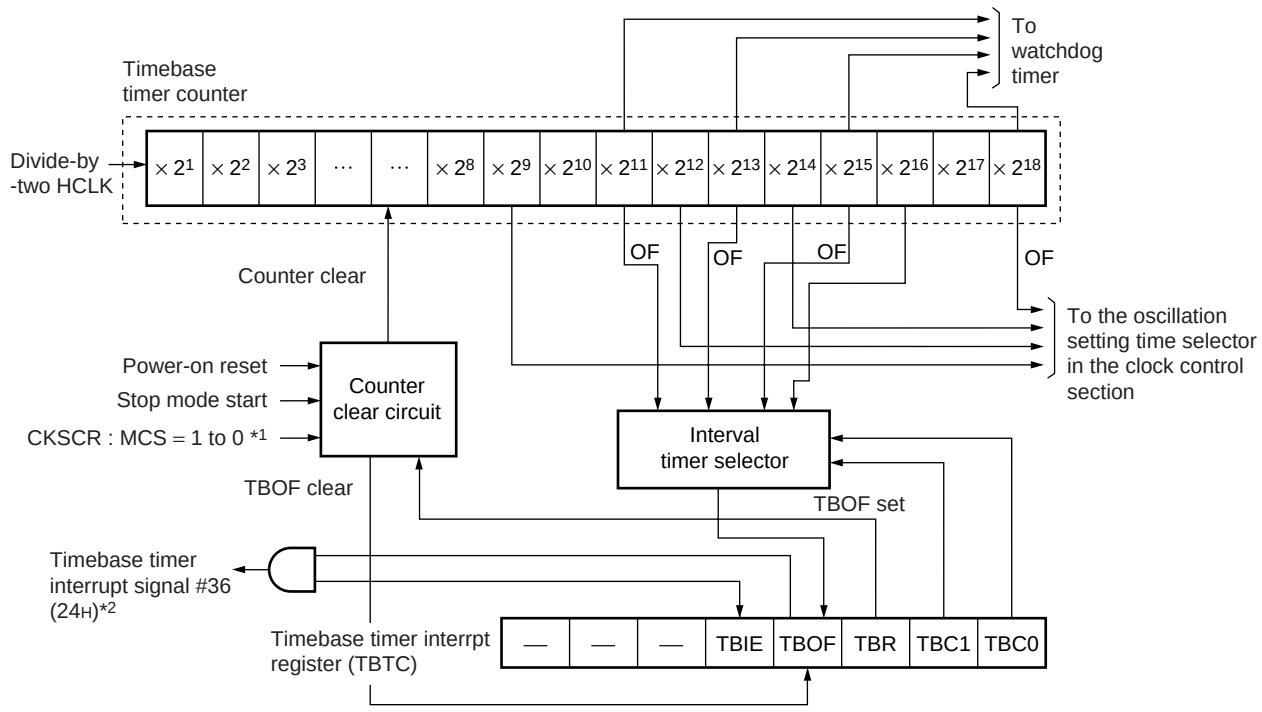

OF : Overflow
HCLK : Oscillation clock

*1 : Switching of the machine clock from the oscillation clock to the PLL clock

*2 : Interrupt number

4. Watchdog Timer

The watchdog timer is a 2-bit counter that uses the timebase timer's supply clock as the count clock. After activation, if the watchdog timer is not cleared within a given period, the CPU will be reset.

- Features of Watchdog Timer :
  Reset CPU at four different time intervals
  Status bits to indicate the reset causes

Block Diagram

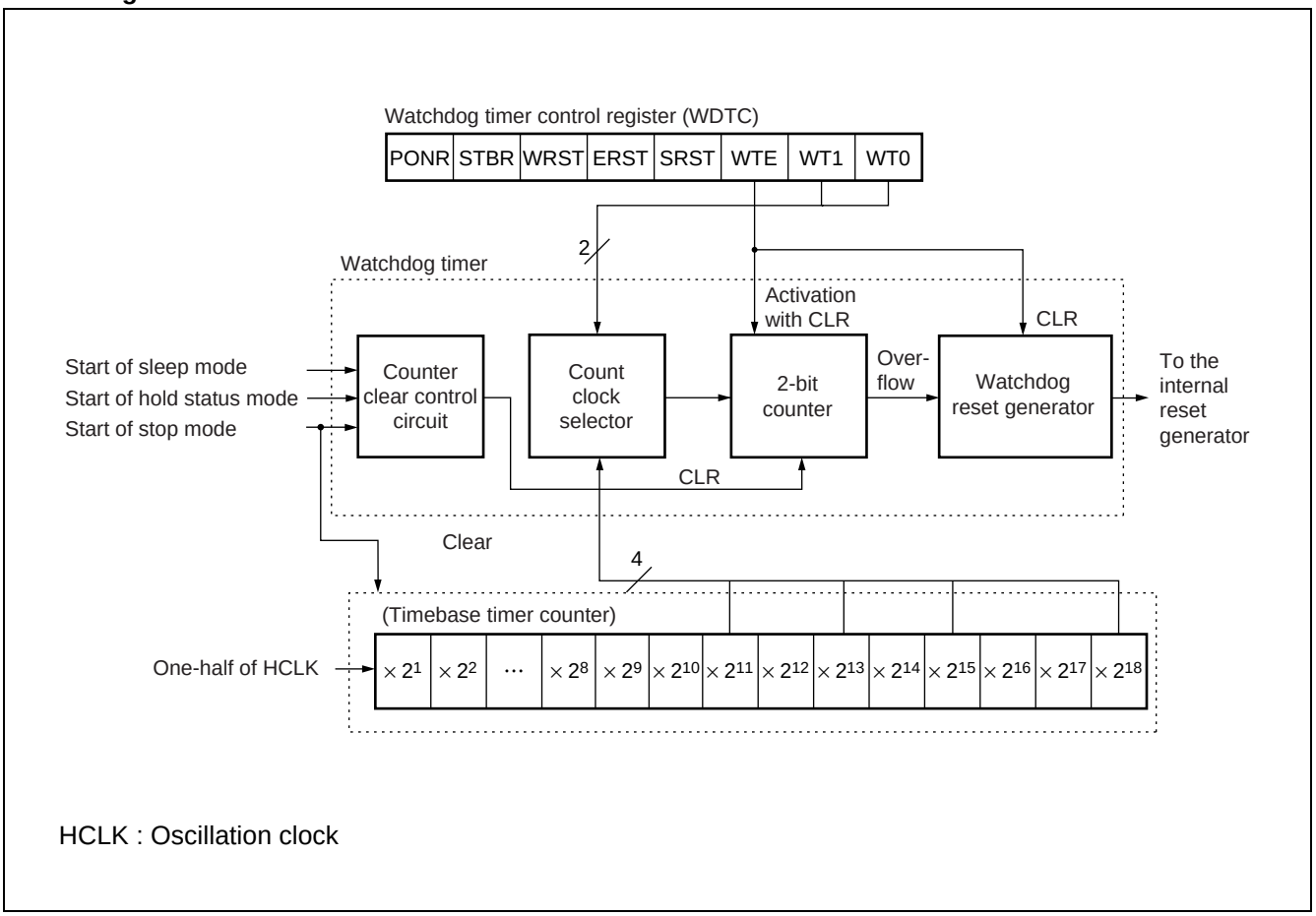

5. 16-bit reload timer (× 2)

The 16-bit reload timer provides two operating mode, internal clock mode and event count mode. In each operating mode, the 16-bit down counter can be reloaded (reload mode) or stopped when underflow (one-shot mode) .

Output pins TO1 - TO0 are able to output different waveform accroding to the counter operating mode. TO1 - TO0 toggles when counter underflow if counter is operated as reload mode. TO1 - TO0 output specified level (H or L) when counter is counting if the counter is in one-shot mode.

Features of the 16 bit reload timer :

- Interrupt generated when timer underflow
- EI^{2}OS supported
- Internal clock operating mode :
  Three internal count clocks can be selected
  Counter can be activated by software or exteranl trigger (singal at TIN1 - TIN0 pin)
  Counter can be reloaded or stopped when underflow after activated
- Event count operating mode :
  Counter counts down by one when specified edge at TIN1 - TIN0 pin
  Counter can be reloaded or stopped when underflow

Block Diagram

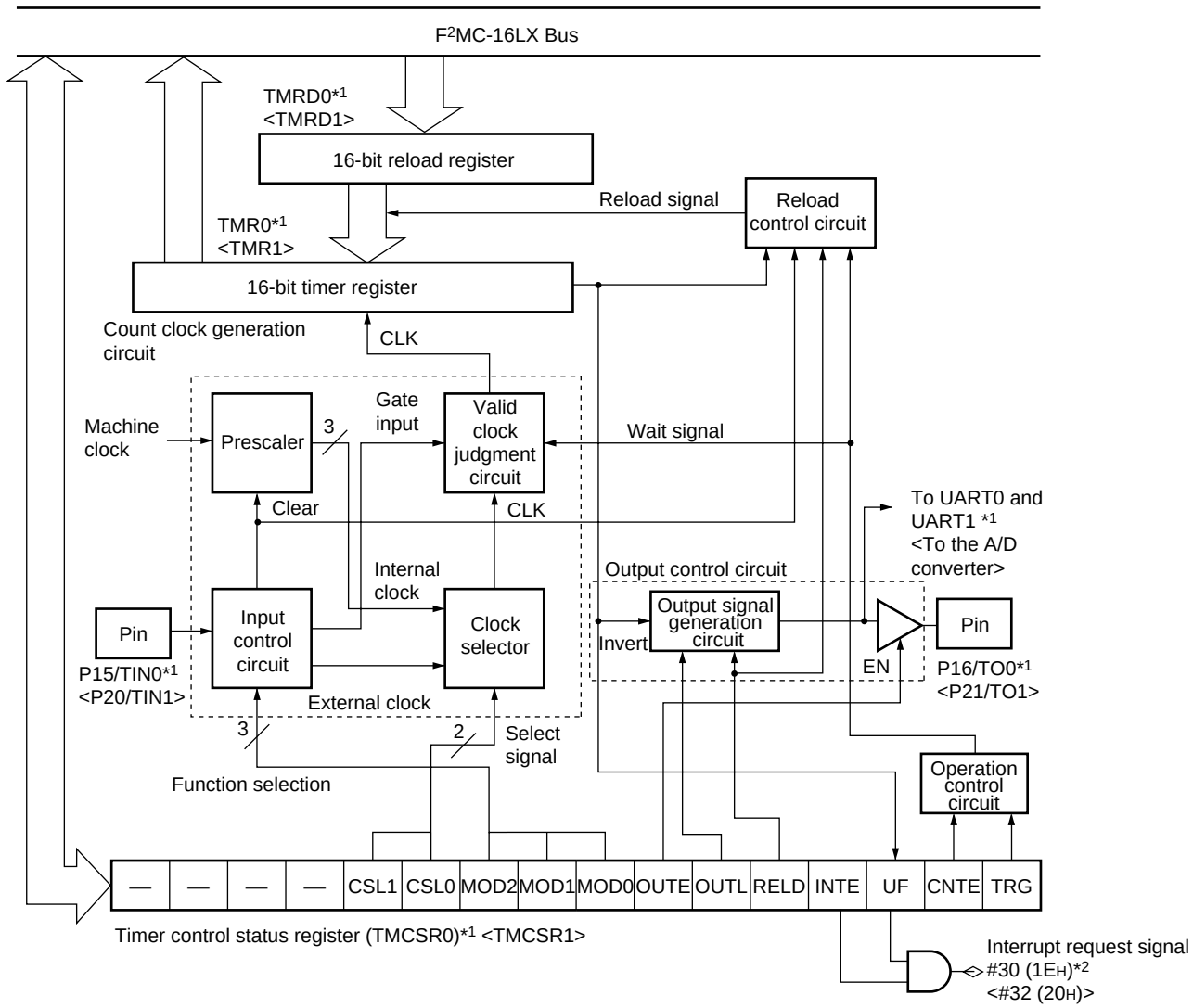

*1 : This register includes channel 0 and channel 1. The register enclosed in < and > indicates the channel 1 register.

*2 : Interrupt number

6. 16-bit PPG Timer (× 3, PPG1 is not present in MB90465 series)

The 16-bit PPG timer consists of a 16-bit down counter, prescaler, 16-bit period setting buffer register, 16-bit duty setting buffer register, 16-bit control register and a PPG output pin. This module can be used to output pulses synchronized by software trigger or GATE signal from Multi-functional timer, refer to “Multi-functional Timer”

Features of 16-bit PPG Timer :

- Two operating mode : PWM and One-shot
- 8 types of counter operation clock (ϕ, ϕ/2, ϕ/4, ϕ/8, ϕ/16, ϕ/32, ϕ/64, ϕ/128) can be selected
- Interrupt generated when trigger signal arrived, or counter borrow, or change of PPG output
- EI^{2}OS supported

Block Diagram

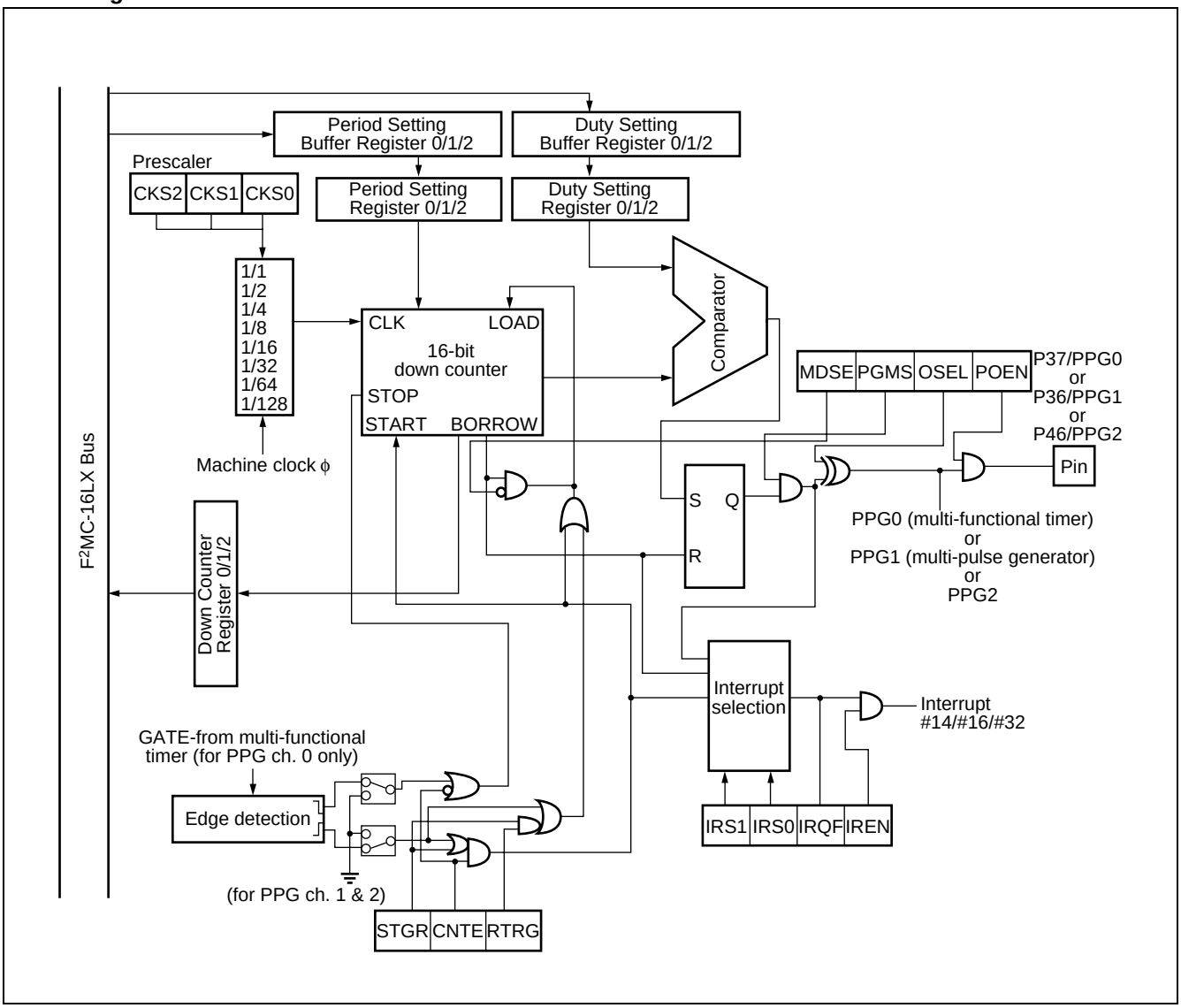

7. Multi-functional Timer

The 16-bit multi-functional timer module consists of one 16-bit free-running timer, four input capture circuits, six output comparators and one channel of 16-bit PPG timer. This module allows six independent waveforms generated by PPG timer or waveform generator to be outputted. With the 16-bit free-run timer and the input capture circuit, a input pulse width measurement and external clock cycle measurement can be done.

(1) 16-bit free-running timer (1 channel)

- The 16-bit free-running timer consists of a 16-bit up/up-down counter, control register, 16-bit compare clear register (with buffer register) and a prescaler.
- 8 types of counter operation clock (ϕ, $\phi/2$, $\phi/4$, $\phi/8$, $\phi/16$, $\phi/32$, $\phi/64$, $\phi/128$) can be selected. (ϕ is the machine clock)
- Two types of interrupt causes :
  - Compare clear interrupt is generated when there is a comparing match with compare clear register and 16-bit free-run timer.
  - Zero detection interrupt is generated while 16-bit free-running timer is detected as zero in count value.
- EI^{2}OS supported
- The compare clear register has a selectable buffer register, into which data is written for transfer to the compare clear register. When the timer is stopped, transfer occurs immediately when the data is written to the buffer. When the timer is operation, data transfer from the buffer occurs when the timer value is detected to be zero.
- Reset, software clear, compare match with compare clear register in up-count mode will reset the counter value to “0000_H”.
- Supply clock to output compare module :
  The prescaler ouptut is acted as the count clock of the output compare.

(2) Output compare module (6 channels)

- The output compare module consists of six 16-bit compare registers (with selectable buffer register) , compare output latch and compare control registers. An interrupt is generated and output level is inverted when the value of 16-bit free-running timer and compare register are matched.
- 6 compare registers can be operated independently.
- Output pins and interrupt flag are corresponding to each compare register.
- Inverts output pins by using 2 compare registers together. 2 compare registers can be paired to control the output pins.
- Setting the initial value for each output pin is possible.
- Interrupt generated when there is a comparing match with output compare register and 16 bit free-run timer
- EI^{2}OS supported

(3) Input capture module (4 channels)

Input capture consists of 4 independent external input pins, the corresponding capture register and capture control register. By detecting any edge of the input signal from the external pin, the value of the 16-bit free-running timer can be stored in the capture register and an interrupt is generated simultaneously.

- Operation synchronized with the 16-bit free-run timer’s count clock.
- 3 types of trigger edge (rising edge, falling edge and both edge) of the external input signal can be selected and there is indication bit to show the trigger edge is rising or falling.
- 4 input captures can be operated independently.
- Two independent interrupts are generated when detecting a valid edge from external input.
- EI^{2}OS supported

(4) 16-bit PPG timer ($\times$ 1)

The 16-bit PPG timer 0 is used to provide a PPG signal for waveform generator.

(5) Waveform Generator module

The waveform generator consists of three 16-bit timer registers, three timer control registers and 16-bit waveform control register.

With waveform generator, it is possible to generate real time output, 16-bit PPG waveform output, non-overlap 3-phase waveform output for inverter control and DC chopper waveform output.

- It is possible to generate a non-overlap waveform output based on dead-time of 16-bit timer. (Dead-time timer function)
- It is possible to generate a non-overlap waveform output when realtime output is operated in 2-channel mode. (Dead-time timer function)
- By detecting realtime output compare match, GATE signal of the PPG timer operation will be generated to start or stop PPG timer operation. (GATE function)
- When a match is detected by realtime output compare, the 16-bit timer is activated. The PPG timer can be started or stopped easily by generating a GATE signal for PPG operation until the 16-bit timer stops. (GATE function)
- Forced to stop output waveform using DTTI0 pin input
- Interrupt generated when DTTI0 active or 16-bit tmer underflow
- EI^{2}OS supported

- MCU to 3-phase Motor Interface Circuit

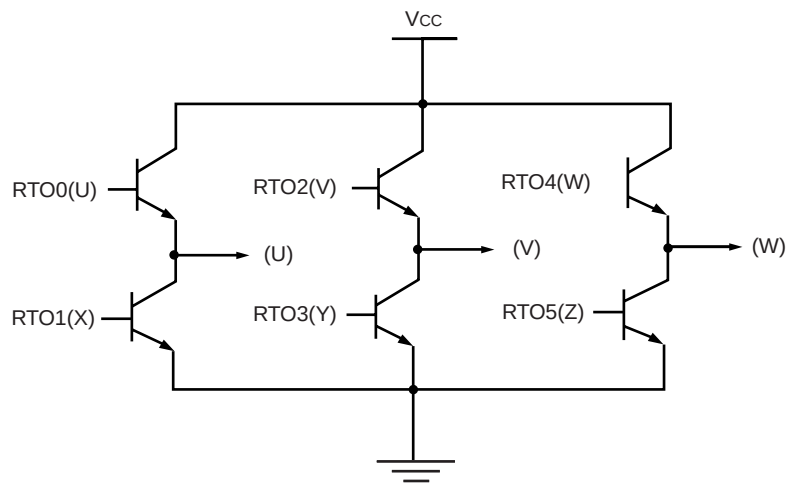

RTO0 (U) , RTO2 (V) , RTO4 (W) are called “UPPER ARM”.

RTO1 (X) , RTO3 (Y) , RTO5 (Z) are called “LOWER ARM”.

RTO0 (U) and RTO1 (X) are called “non-overlapping output pair”.

RTO2 (V) and RTO3 (Y) are called “non-overlapping output pair”.

RTO4 (W) and RTO5 (Z) are called “non-overlapping output pair”.

(U) , (V) , (W) are the 3-phase coil connection.

- 3-phase Motor Coil Connection Circuit

Star Connection Circuit

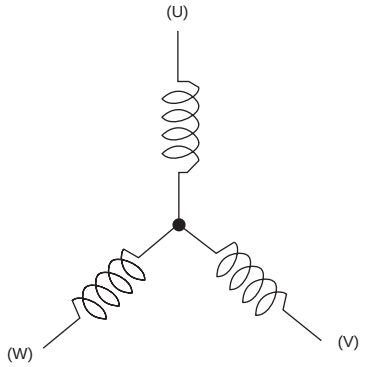

Delta Connection Circuit

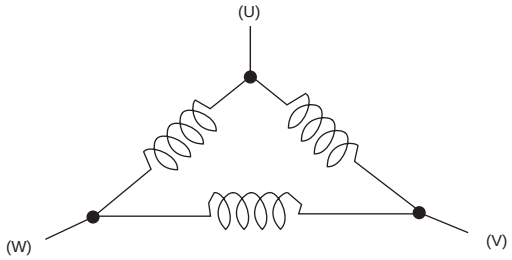

Block Diagram

- Block Diagram of Multi-functional Timer

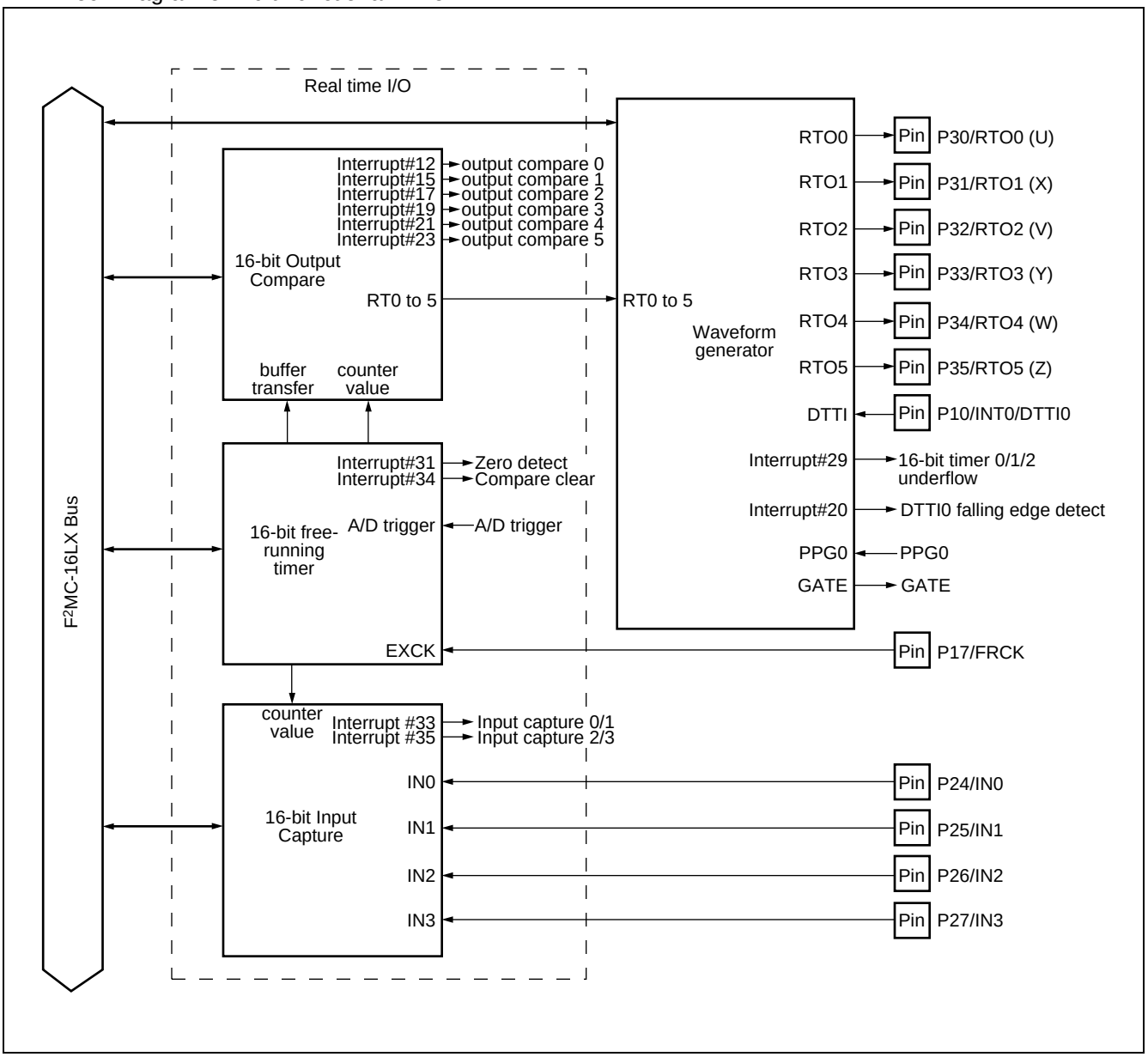

(Continued)

- Block diagram of 16-bit free-running timer

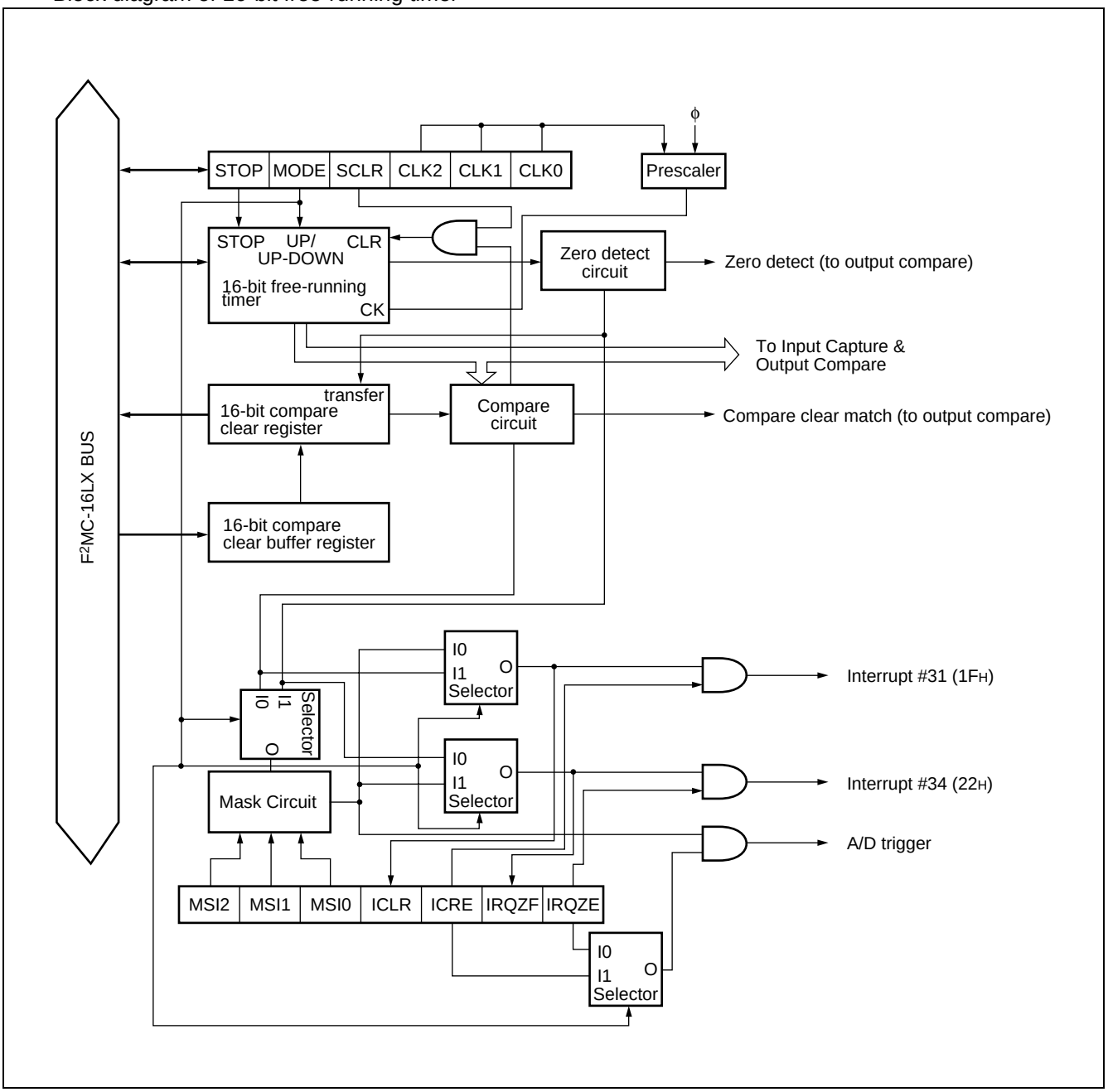

(Continued)

- Block diagram of 16-bit output compare

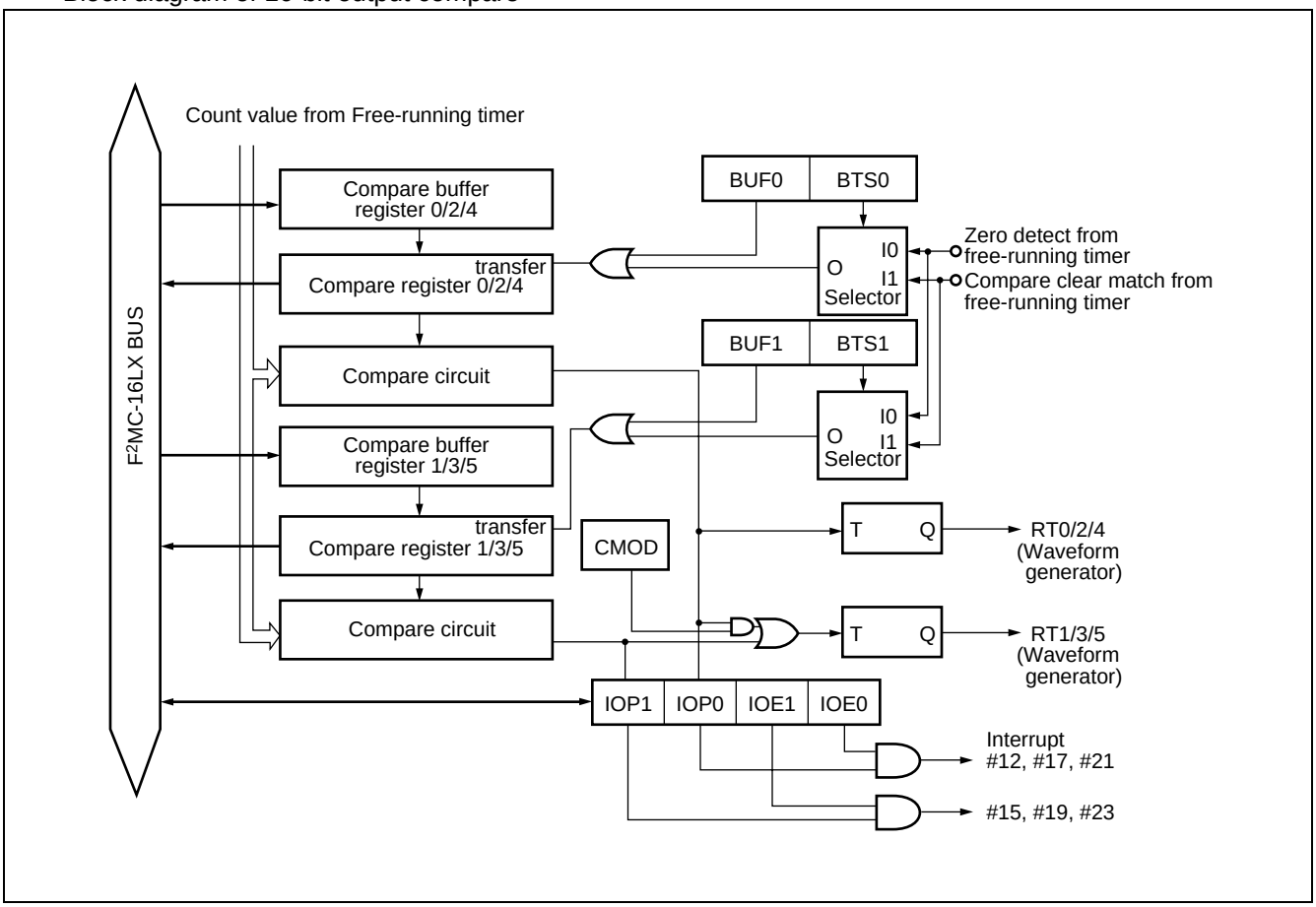

- Block diagram of 16-bit input capture

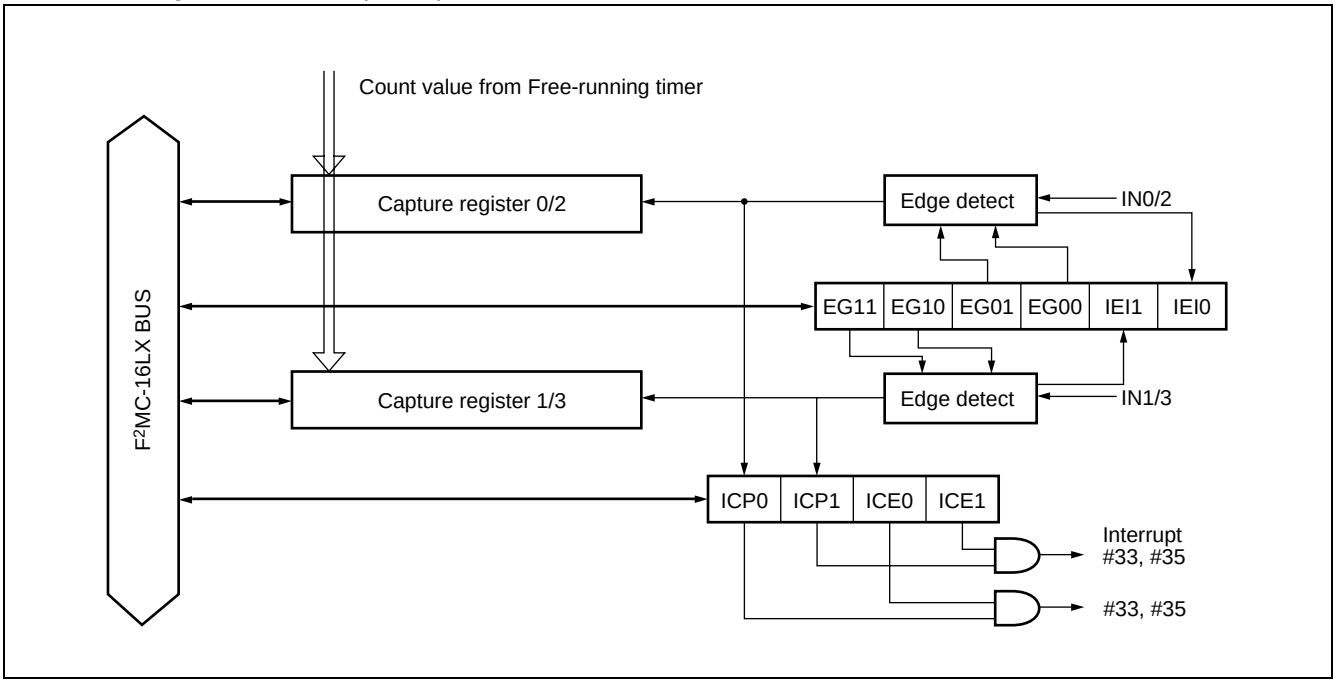

(Continued)

(Continued)

- Block diagram of waveform generator

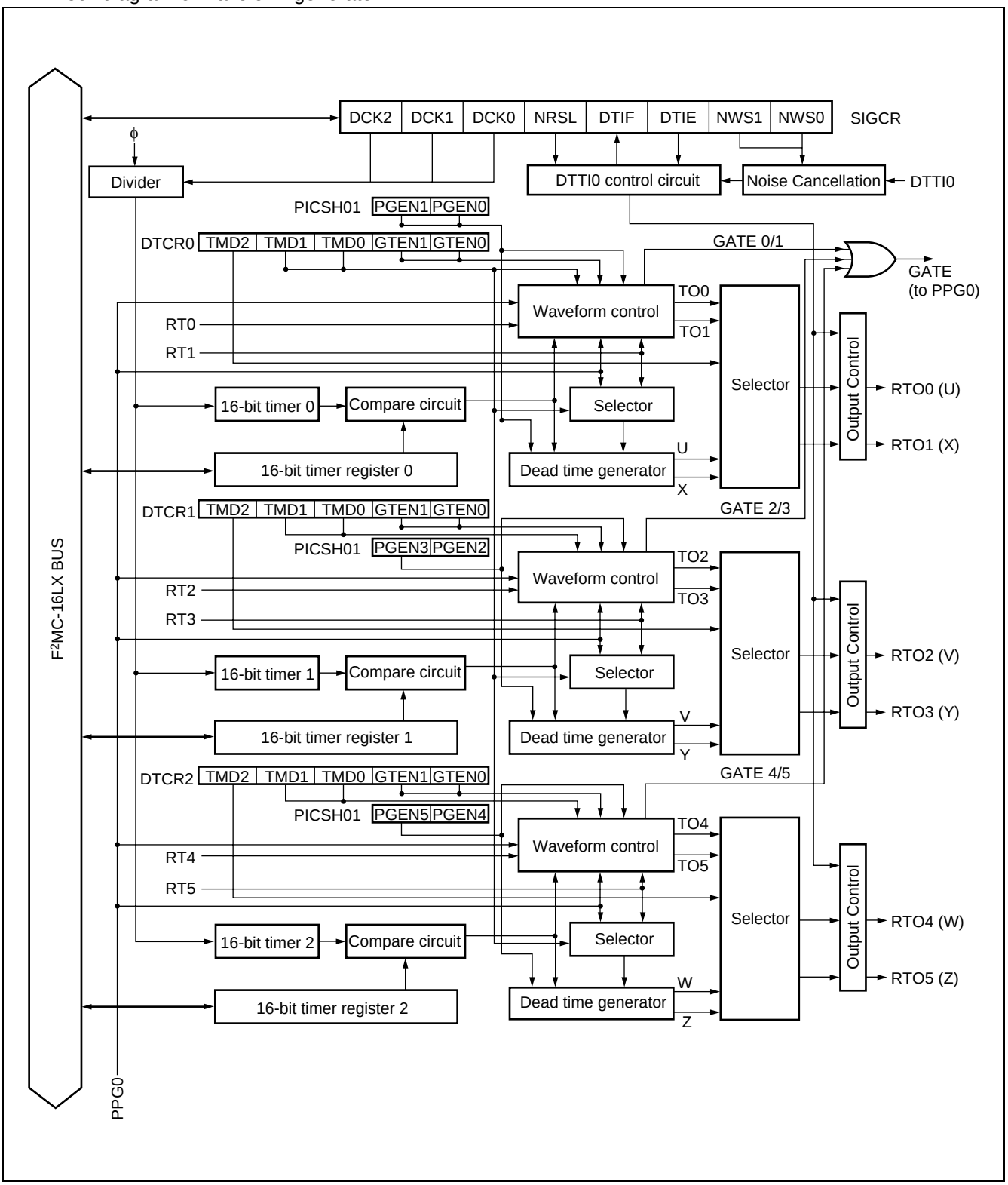

8. Multi-Pulse Generator (Not present in MB90465 series, but the 16-bit reload timer 0 can be used individually)

The Multi-pulse Generator consists of a 16-bit PPG timer, a 16-bit reload timer and a waveform sequencer. By using the waveform sequencer, 16-bit PPG timer output signal can be directed to Multi-pulse Generator output (OPT5 to 0) according to the input signal of Multi-pulse Generator (SNI2 to 0) . Meanwhile, the OPT5 to 0 output signal can be hardware terminated by DTTI input (DTTI1) in case of emergency. The OPT5 to 0 output signals are synchronized with the PPG signal in order to eliminate the unwanted glitch.

The Multi-pulse generator has the following features :

- Output Signal Control
  - 12 output data buffer registers are provided
  - Output data register can be updated by any one of output data buffer registers when :
  1. an effective edge detected at SNI2 - SNI0 pin
  2. 16-bit reload timer underflow
  3. output data buffer register OPDBR0 is written
- Output data register (OPDR) determines which OPT terminals (OPT5 - 0) output the 16-bit PPG waveform
  - Waveform sequencer is provided with a 16-bit timer to measure the speed of motor
  - The 16-bit timer can be used to disable the OPT output when the position detection is missing
- Input Position Detect Control
  - SNI2 - SNI0 input can be used to detect the rotor position
  - A controllable noise filter is provided to the SNI2 - SNI0 input
- PPG Synchronization for Output signal
  - OPT output is able to synchronize the edge of PPG waveform to avoid a short pulse (or glitch) appearance
- Vaious interrupt generation causes
- EI^{2}OS supported

(1) 16-bit PPG timer (x 1, not present in MB90465 series)

The 16-bit PPG timer 1 is used to provide a PPG signal for waveform sequencer.

(2) 16-bit reload timer (x 1)

The 16-bit reload timer 0 is used to provide signal to waveform sequencer.

(3) Waveform sequencer (not present in MB90465 series)

By using the waveform sequencer, 16-bit PPG timer output signal can be directed to Multi-pulse generator output (OPT5 ~ OPT0) according to the input signal of Multi-pulse generator (SNI2 ~ SNI0). Meanwhile, the OPT5 ~ OPT0 outputsignal can be hardware terminated by DTTI input (DTTI1) in case of emergency. The OPT5 ~ OPT0 output signalsare synchronized with the PPG signal in order to eliminate the unwanted glitch.

Block Diagram

- Block diagram of Multi-pulse generator

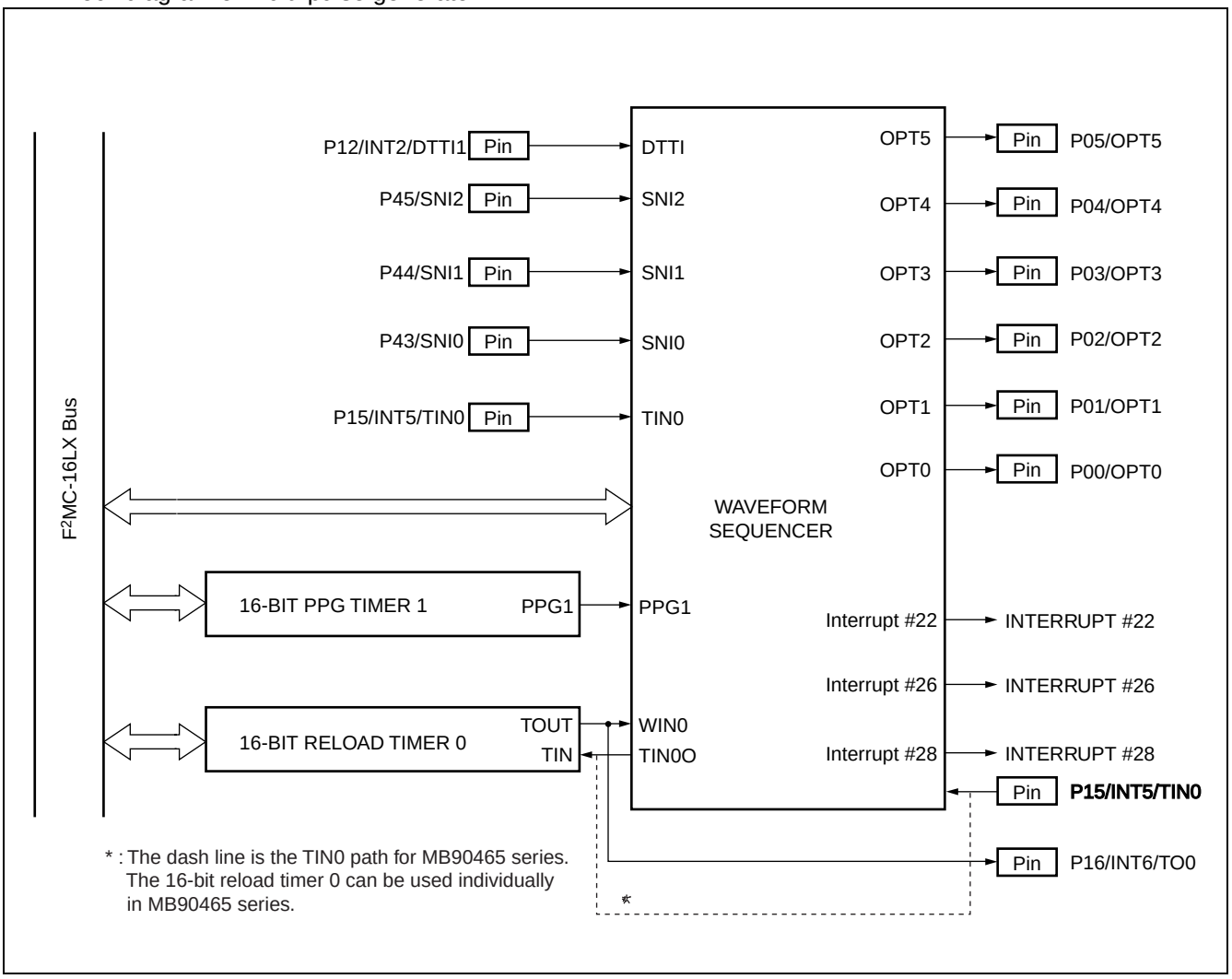

* : The dash line is the TIN0 path for MB90465 series. The 16-bit reload timer 0 can be used individually in MB90465 series.

(Continued)

(Continued)

- Block diagram of waveform sequencer

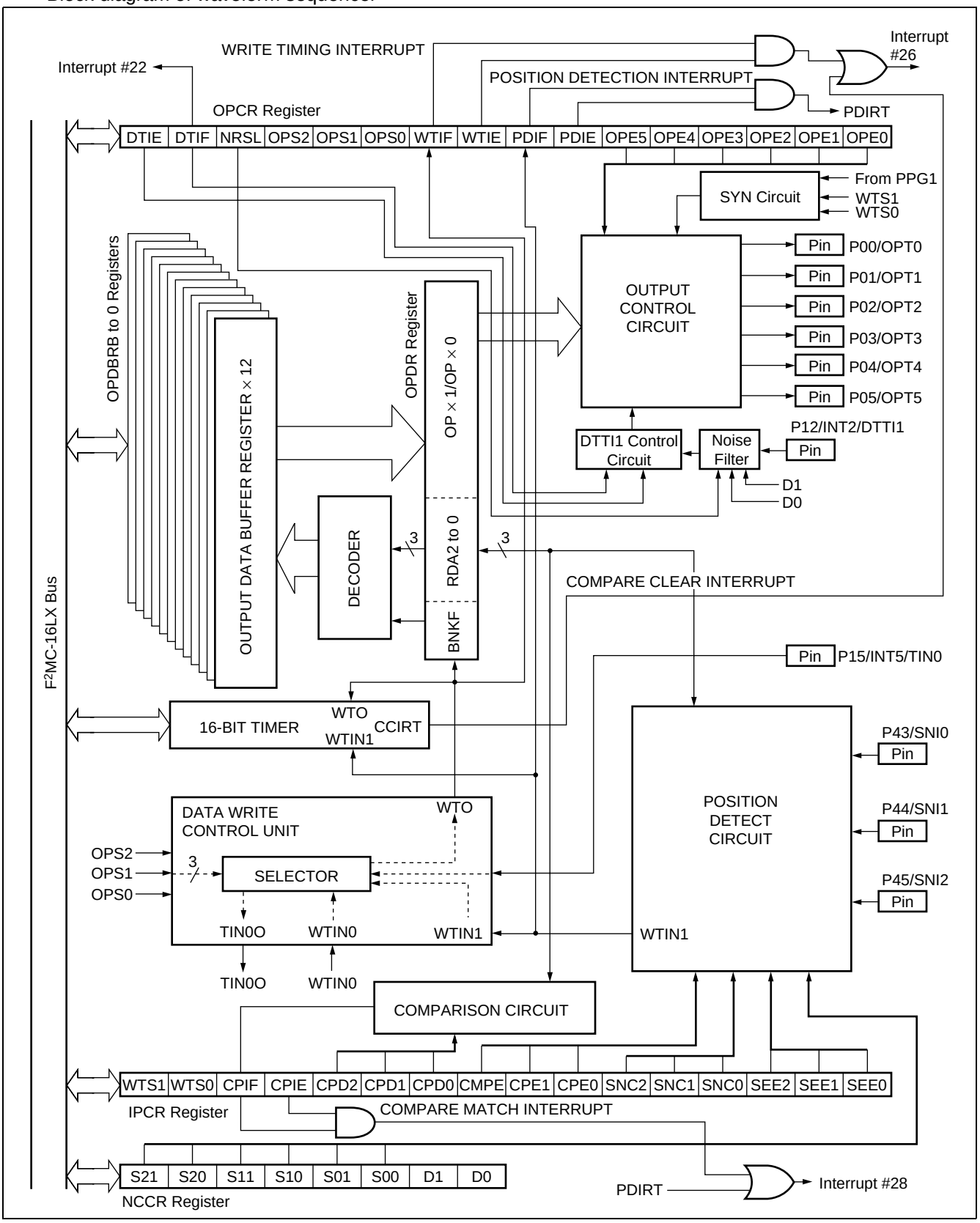

9. PWC Timer (x 2, PWC0 is not present in MB90465 series)

The PWC (pulse width count) timer is a 16-bit multi-function up-counter with reload timer functions and input-signal pulse-width count functions as well.

The PWC timer consists of a 16-bit counter, on input pulse divider, a divide ratio control register, a count input pin, a pulse output pin, and a 16-bit control register.

The PWC timer has the following features :

- Interrupt generated when timer overflow or end of PWC measurement.
- EI^{2}OS supported
- Timer functions :
  - Generates an interrupt request at set time intervals.
  - Outputs pulse signals synchronized with the timer cycle.
  - Selects the counter clock from among three internal clocks.
- Pulse-width count functions
  - Counts the time between external pulse input events.
  - Selects the counter clock from among three internal clocks.
  - Count mode
    - H pulse width (rising edge to falling edge) /L pulse width (falling edge to rising edge)
    - Rising-edge cycle (rising edge to falling edge) /Falling-edge cycle (falling edge to rising edge)
    - Count between edges (rising or falling edge to falling or rising edge)

  Capable of counting cycles by dividing input pulses by 2^2, 2^4, 2^6, 2^8 using an 8-bit input divider.
  Generates an interrupt request upon the completion of count operation.
  Selects single or consecutive count operation.

Block Diagram

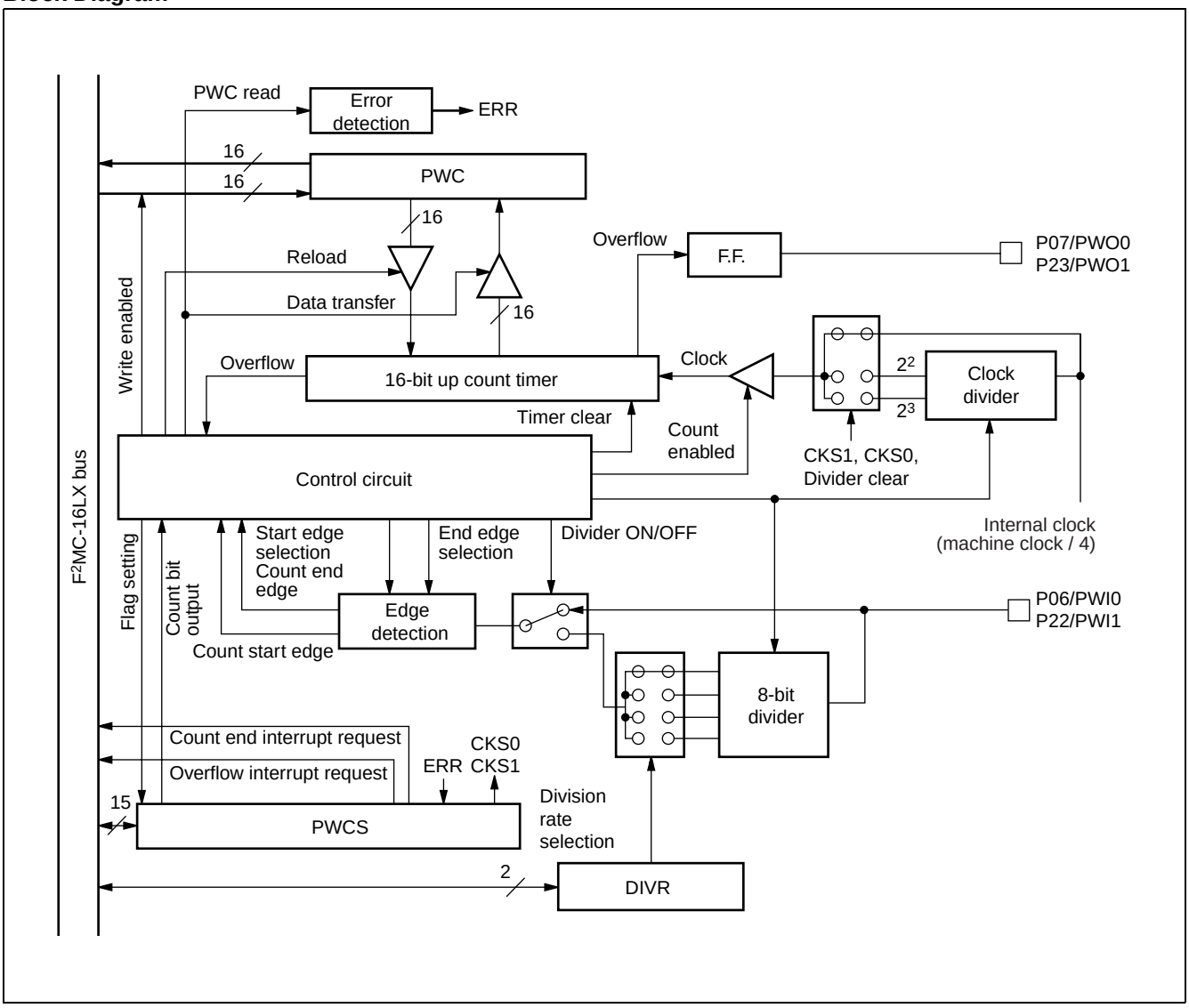

10. UART (x 2)

The UART is a serial I/O port for asynchronous (start-stop) communication or clock-synchronous communication.

The UART has the following features :

- Full-duplex double buffering
- Capable of asynchronous (start-stop bit) and CLK-synchronous communications
- Support for the multiprocessor mode
- Various method of baud rate generation :
  - External clock input possible
  - Internal clock (a clock supplied from 16-bit reload timer can be used.)
  - Embedded dedicated baud rate generator

Operation	Baud rate
Asynchronous	31250/9615/4808/2404/1202 bps
CLK synchronous	2 M/1 M/500 K/250 K/125 K/62.5 Kbps

* : Assuming internal machine clock frequencies of 6, 8, 10, 12, and 16 MHz

- Error detection functions (parity, framing, overrun)
- NRZ (Non Return to Zero) Signal format
- Interrupt request :
  - Receive interrupt (receive complete, receive error detection)
  - Transmit interrupt (transmission complete)
  - Transmit / receive conforms to extended intelligent I/O service (EI^{2}OS)
- Flexible data length :
  - 7 bit to 9 bit selective (without a parity bit)
  - 6 bit to 8 bit selective (with a parity bit)

Block Diagram

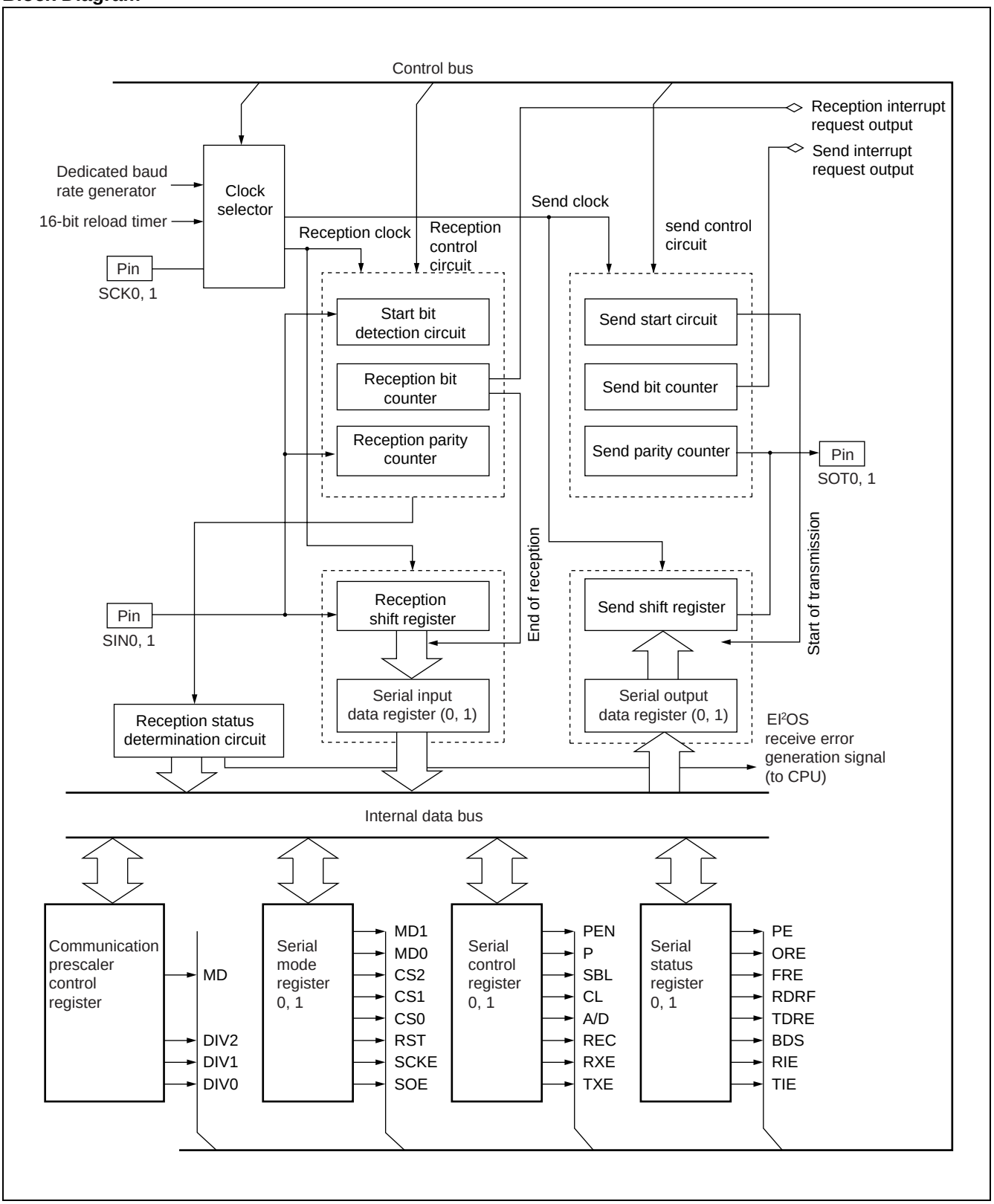

11. DTP/External Interrupts

The DTP/external interrupt circuit is activated by the signal supplied to a DTP/external interrupt pin. The CPU accepts the signal using the same procedure it uses for normal hardware interrupts and generates external interrupts or activates the extended intelligent I/O service (EI^{2}OS) .

Features of DTP/External Interrupt :

- Total 8 external interrupt channels
- Two request levels (“H” and “L”) are provided for the intelligent I/O service.
- Four request levels (rising edge, falling edge, “H” level and “L” level) are provided for external interrupt requests.

Block Diagram

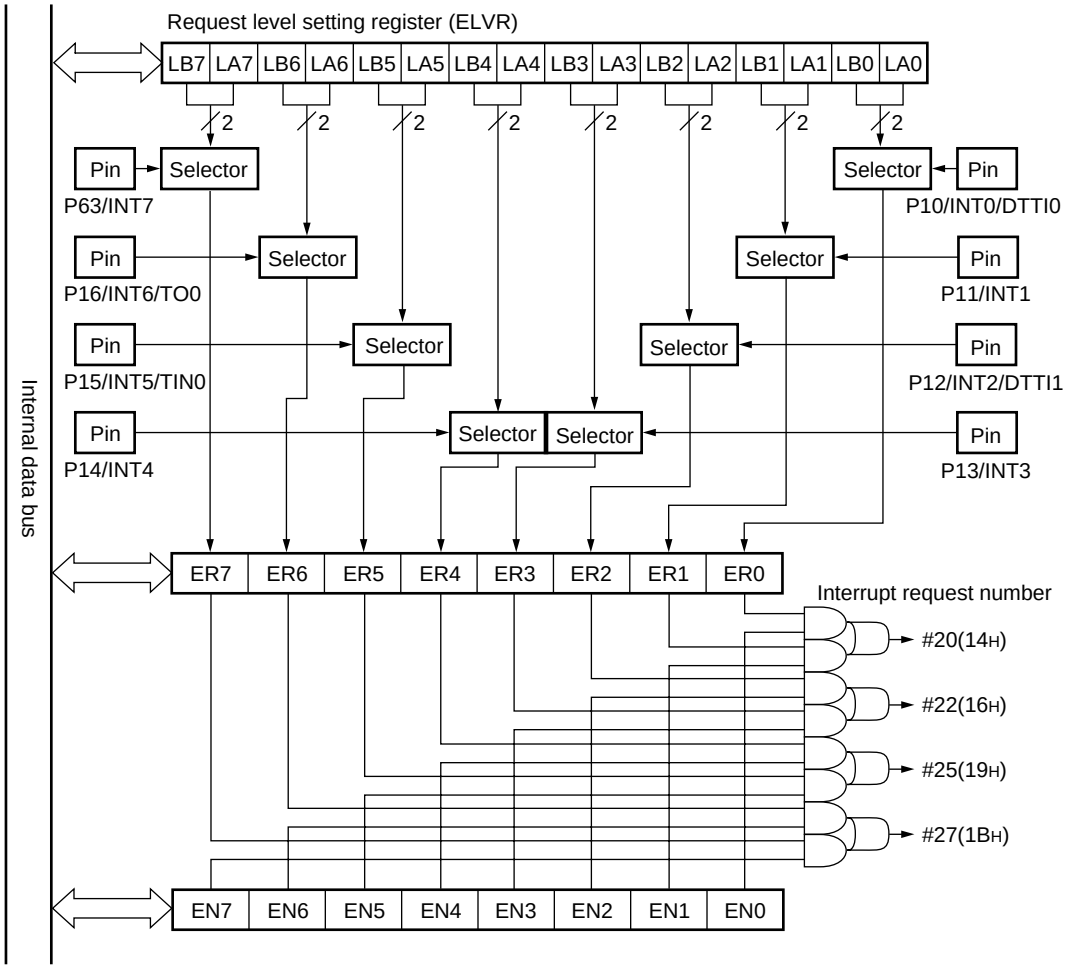

12. Delayed Interrupt Generation Module

The delayed interrupt generation module is used to generate a task switching interrupt. Interrupt requests to the F²MC-16LX CPU can be generated and cleared by software using this module.

Block Diagram

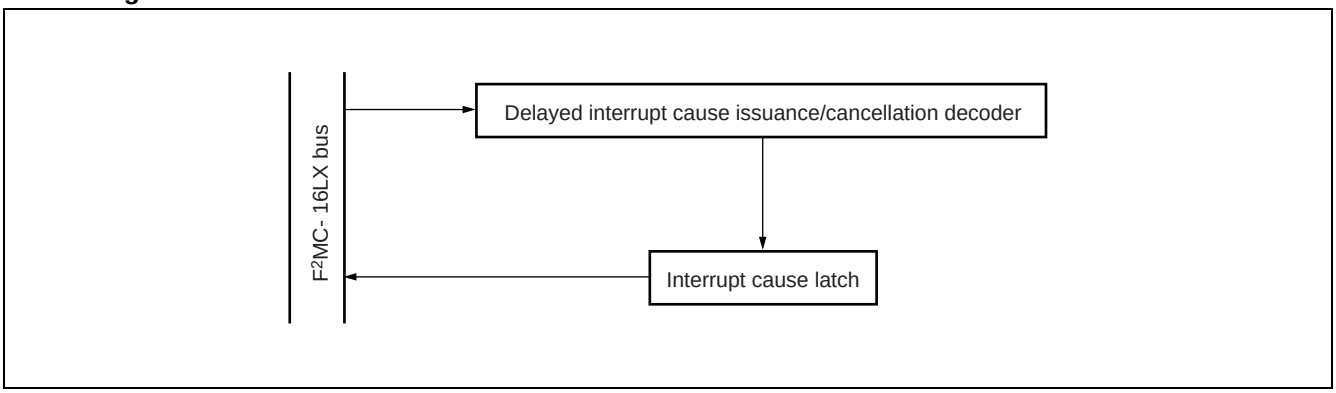

13. A/D Converter

The converter converts the analog voltage input to an analog input pin (input voltage) to a digital value. The converter has the following features :

- The minimum conversion time is 6.13 µs (for a machine clock of 16 MHz; includes the sampling time) .
- The minimum sampling time is 2.0 µs (for a machine clock of 16 MHz) .
- The converter uses the RC-type successive approximation conversion method with a sample hold circuit.
- A resolution of 10 bits or 8 bits can be selected.
- Up to eight channels for analog input pins can be selected by a program.
- Various conversion mode :
  - Single conversion mode : Selectively convert one channel.
  - Scan conversion mode : Continuously convert multiple channels. Maximum of 8 program selectable channels.
  - Continuous conversion mode : Repeatedly convert specified channels.
  - Stop conversion mode : Convert one channel then halt until the next activation. (Enables synchronization of the conversion start timing.)
- At the end of A/D conversion, an interrupt request can be generated and EI^2OS can be activated.
- In the interrupt-enabled state, the conversion data protection function prevents any part of the data from being lost through continuous conversion.
- The conversion can be activated by software, 16-bit reload timer 1 (rising edge) and 16-bit free-running timer zero detection edge.

Block Diagram

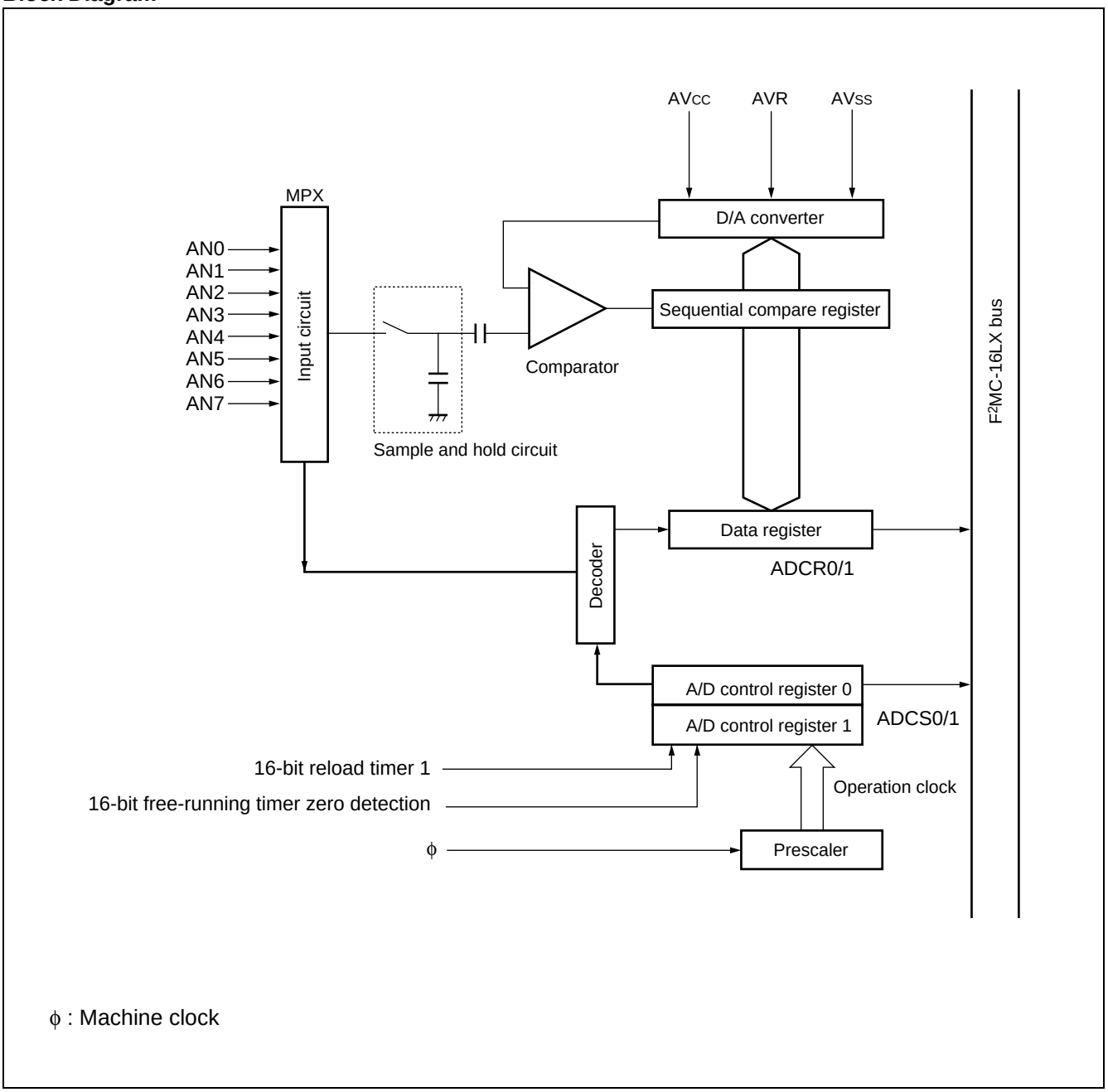

14. ROM Correction Function

In the case that the address of the instruction after the one that a program is currently processing matches the address configured in the detection address configuration register, the program forces the next instruction to be processed into an INT9 instruction, and branches to the interrupt process program. Since processing can be conducted using INT9 interrupts, programs can be repaired using batch processing.

•Overview of the Rom correction Function

- The address of the instruction after the one that a program is currently processing is always stored in an address latch via the internal data bus. Address match detection constantly compares the address stored in the address latch with the one configured in the detection address configuration register. If the two compared addresses match, the CPU forcibly changes this instruction into an INT9 instruction, and executes an interrupt processing program.
- There are two detection address configuration registers : PADR0 and PADR1. Each register provides an interrupt enable bit. This allows you to individually configure each register to enable/prohibit the generation of interrupts when the address stored in the address latch matches the one configured in the detection address configuration register.

Block Diagram

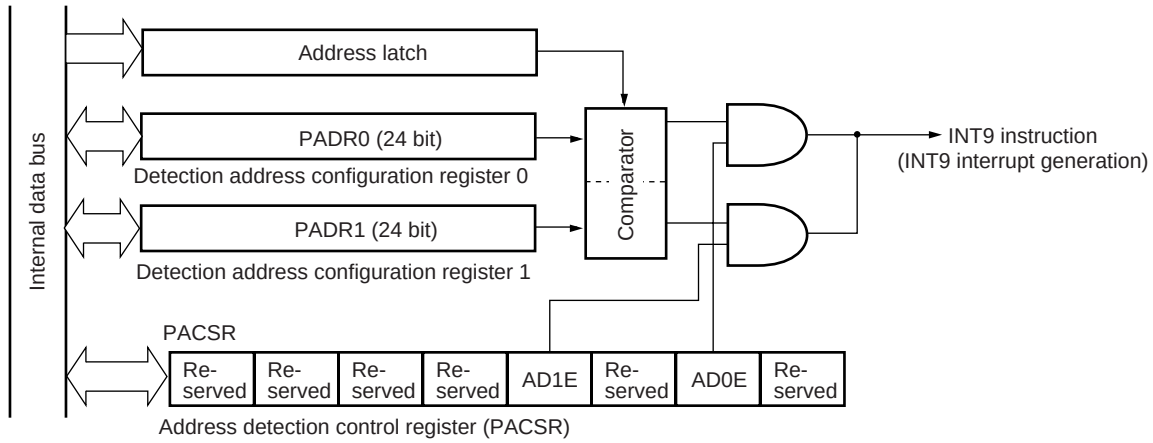

Reserved : Make sure this is always set to “01”

- Address latch
  Stores value of address output to internal data bus.
- Address detection control register (PACSR)
  Set this register to enable/prohibit interrupt output when an address match is detected.
- Detection address configuration register (PADR0, PADR1)
  Configure an address with which to compare the address latch value.

15. ROM Mirroring Function Selection Module

The ROM mirroring function selection module can select what the FF bank allocated the ROM and see through the 00 bank according to register settings.

Block Diagram

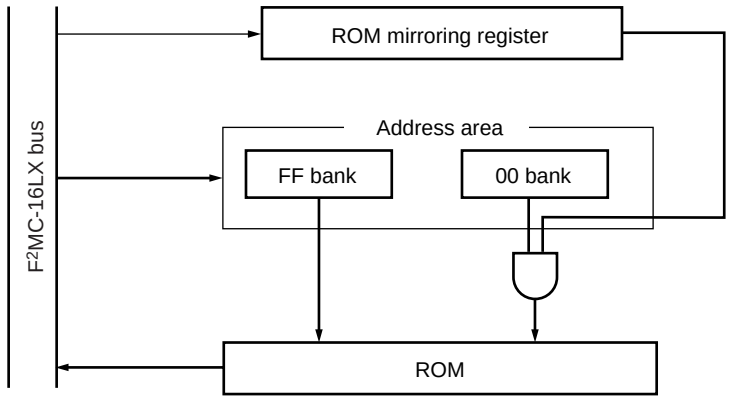

16. 512/1024 Kbit Flash Memory

The 512 Kbit (MB90F462 and MB90F462A) or 1024 Kbit (MB90F463A) flash memory is allocated in the FEH toFFH banks on the CPU memory map. Like masked ROM, flash memory is read-accessible and program-accessible to the CPU using the flash memory interface circuit.

The flash memory can be programmed/erased by the instruction from the CPU via the flash memory interface circuit. The flash memory can therefore be reprogrammed (updated) while still on the circuit board under integrated CPU control, allowing program code and data to be improved efficiently.

Note that sector operations such as “enable sector protect” cannot be used.

Features of 512/1024 Kbit flash memory

- 64K words x 8 bits/32K words x 16 bits (16K+8K+8K+32K) sector configuration for MB90F462/F462A
- 128K words x 8 bits/64K words x 16 bits (64K+16K+8K+8K+32K) sector configuration for MB90F463A
- 64 kwords × 8 bits/32 kwords × 16 bits (16 k + 8 k + 8 k + 32 k) sector configuration
- Automatic program algorithm (same as the Embedded Algorithm : MBM29F400TA)
- Installation of the deletion temporary stop/delete restart function
- Write/delete completion detected by the data polling or toggle bit
- Write/delete completion detected by the CPU interrupt
- Compatibility with the JEDEC standard-type command
- Each sector deletion can be executed (Sectors can be freely combined) .
- Flash security feature
- Number of write/delete operations 10,000 times guaranteed.
- Flash reading cycle time (Min) 2 machine cycles

(1) Sector configuration of 512Kbit flash memory

The flash memory has the sector configuration illustrated below. The addresses in the illustration are the upper and lower addresses of each sector.

When 512 Kbit flash memory is accessed from the CPU, SA0 to SA3 are allocated in the FF bank registers, respectively.

Flash memory	CPU address	*Writer address
SA3 (16 Kbytes)	FFFFFFH FFC000H	7FFFFH 7C000H
SA2 (8 Kbytes)	FFBFFFH FFA000H	7BFFFH 7A000H
SA1 (8 Kbytes)	FF9FFFH FF8000H	79FFFH 78000H
SA0 (32 Kbytes)	FF7FFFH FF0000H	77FFFH 70000H

When 1024 Kbit flash memory is accessed from the CPU, SA0 and SA1 to SA4 are allocated in the FE and FFbank registers, respectively.

Flash memory	CPU address	*Writer address
SA4 (16 Kbytes)	FFFFFFH FFC000H	7FFFFH 7C000H
SA3 (8 Kbytes)	FFBFFFH FFA000H	7BFFFH 7A000H
SA2 (8 Kbytes)	FF9FFFH FF8000H	79FFFH 78000H
SA1 (32 Kbytes)	FF7FFFH FF0000H	77FFFH 70000H
SA0 (64 Kbytes)	FEFFFFH FE0000H	6FFFFH 60000H

■ ELECTRICAL CHARACTERISTICS

1. Absolute Maximum Ratings

(V_{SS} = AV_{SS} = 0.0 V)

Parameter	Symbol	Rating		Unit	Remarks
		Min	Max		
Power supply voltage	V_{CC}	V_{SS} – 0.3	V_{SS} + 6.0	V	
	AV_{CC}	V_{SS} – 0.3	V_{SS} + 6.0	V	$V_{CC} \geq AV_{CC}$*1
	AVR	V_{SS} – 0.3	V_{SS} + 6.0	V	$AV_{CC} \geq$ AVR, AVR $\geq AV_{SS}$
Input voltage	V_I	V_{SS} – 0.3	V_{SS} + 6.0	V	*2
Output voltage	V_O	V_{SS} – 0.3	V_{SS} + 6.0	V	*2
Maximum clamp current	I_{CLAMP}	– 2.0	+ 2.0	mA	*4
Total maximum clamp current	$\Sigma\lvert I_{CLAMP} \rvert$	—	20	mA	*4
“L” level maximum output current	I_{OL}	—	15	mA	*3
“L” level average output current	I_{OLAV1}	—	4	mA	All pins except P00 ~ P05, P30 ~ P35 Average output current = operating current × operating efficiency
	I_{OLAV2}	—	12	mA	P00 ~ P05, P30 ~ P35 onlyAverage output current = operating current × operating efficiency
“L” level total maximum output current	ΣI_{OL}	—	100	mA	
“L” level total average output current	ΣI_{OLAV}	—	50	mA	Average output current = operating current × operating efficiency
“H” level maximum output current	I_{OH}	—	– 15	mA	*3
“H” level average output current	I_{OHAV}	—	– 4	mA	Average output current = operating current × operating efficiency
“H” level total maximum output current	ΣI_{OH}	—	– 100	mA	
“H” level total average output current	ΣI_{OHAV}	—	– 50	mA	Average output current = operating current × operating efficiency
Power consumption	P_D	—	300	mW	
Operating temperature	T_A	–40	+85	°C	
Storage temperature	Tstg	–55	+150	°C	

*1 : AV_{CC} shall never exceed V_{CC} when power on.

*2 : V_I and V_O shall never exceed V_{CC} + 0.3 V.

*3 : The maximum output current is a peak value for a corresponding pin.

*4 : • Applicable to pins : P00 to P07, P10 to P17, P20 to P27, P30 to P37, P40 to P46, P60 to P63
• Use within recommended operating conditions.
• Use at DC voltage (current) .
• The +B signal should always be applied with a limiting resistance placed between the +B signal and the microcontroller.
• The value of the limiting resistance should be set so that when the +B signal is applied the input current to the microcontroller pin does not exceed rated values, either instantaneously or for prolonged periods.

(Continued)

(Continued)

- Note that when the microcontroller drive current is low, such as in the power saving modes, the +B input potential may pass through the protective diode and increase the potential at the V_{CC} pin, and this may affect other devices.
- Note that if a +B signal is input when the microcontroller current is off (not fixed at 0 V) , the power supply is provided from the pins, so that incomplete operation may result.
- Note that if the +B input is applied during power-on, the power supply is provided from the pins and the resulting supply voltage may not be sufficient to operate the power-on reset.
- Care must be taken not to leave the +B input pin open.
- Note that analog system input/output pins other than the A/D input pins (LCD drive pins, comparator input pins, etc.) cannot accept +B signal input.
- Sample recommended circuits:

• Input/Output Equivalent circuits

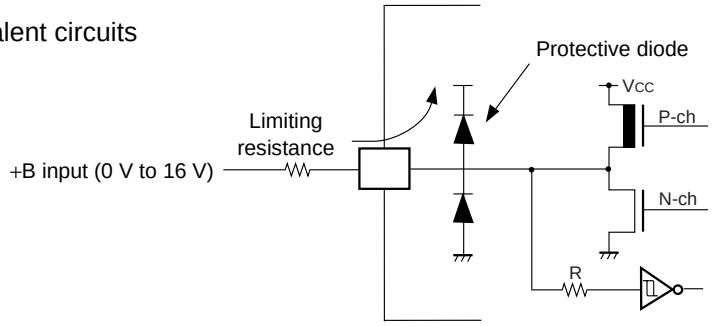

WARNING: Semiconductor devices can be permanently damaged by application of stress (voltage, current, temperature, etc.) in excess of absolute maximum ratings. Do not exceed these ratings.

2. Recommended Operating Conditions

(V_{SS} = AV_{SS} = 0.0 V)

Parameter	Symbol	Value		Unit	Remarks
		Min	Max		
Power supply voltage	V_{CC}	3.0	5.5	V	Normal operation (MB90462, MB90467, MB90V460)
		4.5	5.5	V	Normal operation (MB90F462, MB90F462A, MB90F463A)
	V_{CC}	3.0	5.5	V	Retains status at the time of operation stop
Smoothing capacitor	C_S	0.1	1.0	µF	Use a ceramic capacitor or a capacitor with equivalent frequency characteristics. The smoothing capacitor to be connected to the V_{CC} pin must have a capacitance value higher than C_S.
Operating temperature	T_A	–40	+85	°C	

- C pin connection circuit

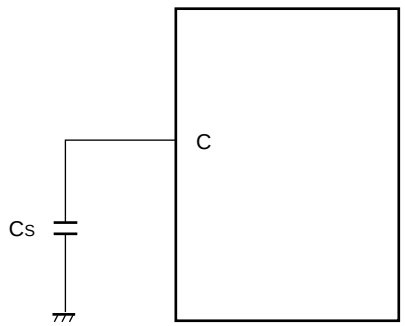

WARNING: The recommended operating conditions are required in order to ensure the normal operation of the semiconductor device. All of the device's electrical characteristics are warranted when the device is operated within these ranges.

Always use semiconductor devices within their recommended operating condition ranges. Operation outside these ranges may adversely affect reliability and could result in device failure.

No warranty is made with respect to uses, operating conditions, or combinations not represented on the data sheet. Users considering application outside the listed conditions are advised to contact their representatives beforehand.

3. DC Characteristics

(V_{CC} = 5.0 V ± 10%, V_{SS} = AV_{SS} = 0.0 V, T_A = –40 °C to +85 °C)

Parameter	Symbol	Pin name	Condition	Value			Unit	Remarks
				Min	Typ	Max		
"H" level output voltage	V_{OH}	All output pins	V_{CC} = 4.5 V, I_{OH} = – 4.0 mA	V_{CC} – 0.5	—	—	V	
"L" level output voltage	V_{OL}	All pins except P00 to P05 and P30 to P35	V_{CC} = 4.5 V, I_{OL} = 4.0 mA	—	—	0.4	V	
		P00 to P05, P30 to P35	V_{CC} = 4.5 V, I_{OL} = 12.0 mA	—	—	0.4	V	
"H" level input voltage	V_{IH}	P00 to P07 P30 to P37 P50 to P57	V_{CC} = 3.0 V to 5.5 V (MB90462, MB90467) V_{CC} = 4.5 V to 5.5 V (MB90F463, MB90F462A, MB90F463A)	0.7 V_{CC}	—	V_{CC} + 0.3	V	CMOS input pin
	V_{IHS}	P10 to P17 P20 to P27 P40 to P46 P60 to P63, $\overline{RST}$		0.8 V_{CC}	—	V_{CC} + 0.3	V	CMOS hysteresis input pin
	V_{IHM}	MD0 to MD2		V_{CC} – 0.3	—	V_{CC} + 0.3	V	MD pin input
"L" level input voltage	V_{IL}	P00 to P07 P30 to P37 P50 to P57		V_{SS} – 0.3	—	0.3 V_{CC}	V	CMOS input pin
	V_{ILS}	P10 to P17 P20 to P27 P40 to P46 P60 to P63, $\overline{RST}$		V_{SS} – 0.3	—	0.2 V_{CC}	V	CMOS hysteresis input pin
	V_{ILM}	MD0 to MD2		V_{SS} – 0.3	—	V_{SS} + 0.3	V	MD pin input
Input leakage current	I_{IL}	All input pins	V_{CC} = 5.5 V, V_{SS} < V_I < V_{CC}	– 5	—	5	µA	

(Continued)

(Continued)

(V_{CC} = 5.0 V ± 10%, V_{SS} = AV_{SS} = 0.0 V, T_A = –40 °C to +85 °C)

Parameter	Symbol	Pin name	Condition	Value Min	Value Typ	Value Max	Unit	Remarks
Power supply current*	I_{CC}	V_{CC}	V_{CC} = 5.0 V, Internal operation at 16 MHz, Normal operation	—	40	50	mA	MB90462, MB90467
				—	30	50	mA	MB90F462, MB90F462A, MB90F463A
			V_{CC} = 5.0 V, Internal operation at 16 MHz, When data written in flash mode programming of erasing	—	45	60	mA	MB90F462, MB90F462A, MB90F463A
	I_{CCS}		V_{CC} = 5.0 V, Internal operation at 16 MHz, In sleep mode	—	15	20	mA	MB90462, MB90467, MB90F462, MB90F462A, MB90F463A
	I_{CTS}		V_{CC} = 5.0 V, Internal operation at 16 MHz, In Timer mode, T_A = 25 °C	—	2.5	5.0	mA	MB90462, MB90467, MB90F462, MB90F462A, MB90F463A
	I_{CCH}		In stop mode, T_A = 25 °C	—	5	20	µA	MB90462, MB90467, MB90F462, MB90F462A, MB90F463A
Input capacitance	C_{IN}	Except AV_{CC}, AV_{SS}, C, V_{CC} and V_{SS}	—	—	10	80	pF	
Pull-up resistance	R_{UP}	P00 to P07 P10 to P17 $\overline{RST}$	—	25	50	100	kΩ	
Pull-down resistance	R_{DOWN}	MD2	—	25	50	100	kΩ	

* : The current value is preliminary value and may be subject to change for enhanced characteristics without previous notice. The power supply current is measured with an external clock.

4. AC Characteristics

(1) Clock Timings

(V_{CC} = 5.0 V ± 10%, V_{SS} = AV_{SS} = 0.0 V, T_A = –40 °C to +85 °C)

Parameter	Symbol	Pin name	Value			Unit	Remarks
			Min	Typ	Max		
Clock frequency	f_C	X0, X1	3	—	16	MHz	Crystal oscillator
			3	—	32		External clock *2
Clock cycle time	t_{HCYL}	X0, X1	62.5	—	333	ns	Crystal oscillator
			31.25	—	333	ns	External clock
Frequency fluctuation rate locked*1	Δf	—	—	—	5	%	
Input clock pulse width	P_{WH} P_{WL}	X0	10	—	—	ns	Recommened duty ratio of 30% to 70%
Input clock rise/fall time	t_{CR} t_{CF}	X0	—	—	5	ns	External clock operation
Internal operating clock	f_{CP}	—	1.5	—	16	MHz	Main clock operation
Internal operating clock cycle time	t_{CP}	—	62.5	—	666	ns	Main clock operation

*1 : The frequency fluctuation rate is the maximum deviation rate of the preset center frequency when the multiplied PLL signal is locked.

*2 : Internal operating clock frequency must not be over 16 MHz.

$$\Delta f = \frac{|\alpha|}{fo} \times 100\ (\%)$$

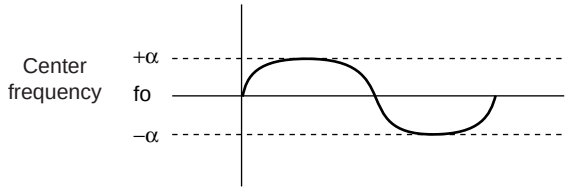

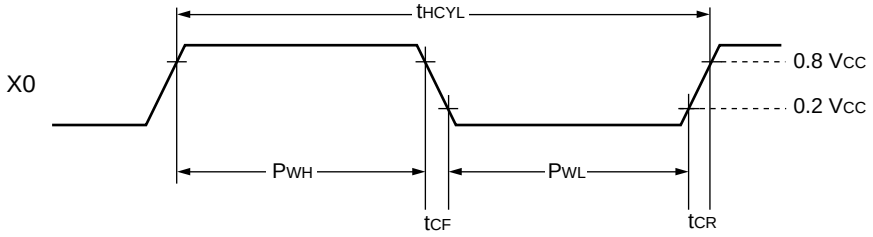

Relationship between internal operating clock frequency and power supply voltage

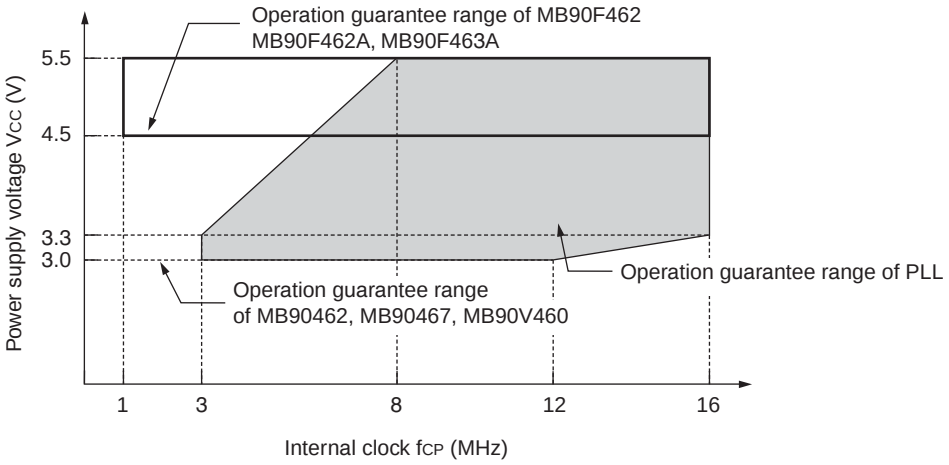

Relationship between oscillating frequency and internal operating clock frequency

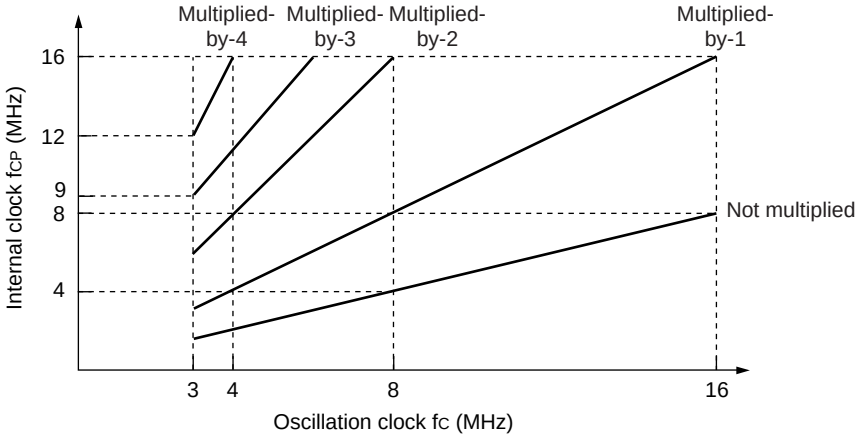

The AC ratings are measured for the following measurement reference voltages

- **Input signal waveform**

Hysteresis Input Pin

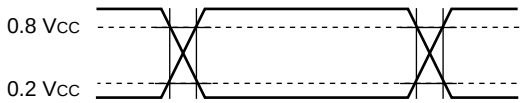

Pin other than hysteresis input/MD input

- **Output signal waveform**

Output Pin

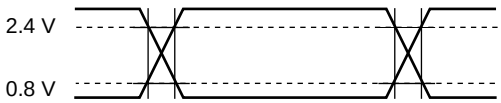

(2) Reset Input Timing

(V_{CC} = 5.0 V ± 10%, V_{SS} = AV_{SS} = 0.0 V, T_A = –40 °C to +85 °C)

Parameter	Symbol	Pin	Condition	Value		Units	Remarks
				Min	Max		
Reset input time	t_{RSTL}	$\overline{RST}$	—	4 t_{CP}	—	ns	Under normal operation
				Oscillation time of oscillator + 4 t_{CP}*	—	ms	In stop mode

* : Oscillation time of oscillator is time that amplitude reached the 90%. In the crystal oscillator, the oscillation time is between several ms to tens of ms. In ceramic oscillator, the oscillation time is between handreds µs to several ms. In the external clock, the oscillation time is 0 ms.

- **In stop mode**

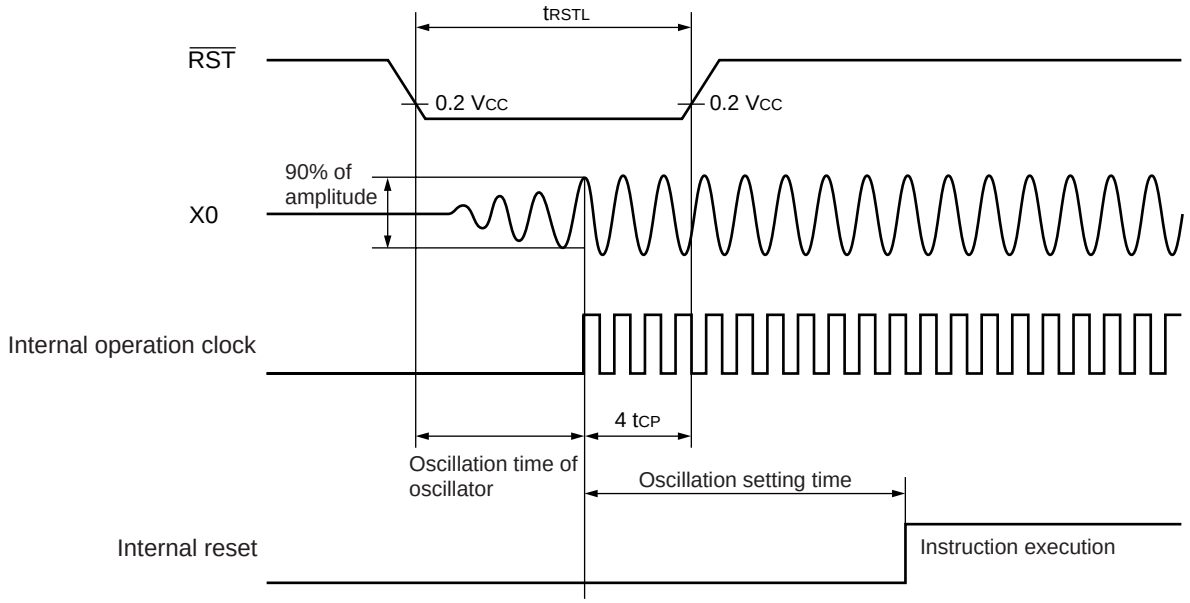

(3) Power-on Reset

(V_{CC} = 5.0 V ± 10%, V_{SS} = AV_{SS} = 0.0 V, T_A = –40 °C to +85 °C)

Parameter	Symbol	Pin name	Condition	Value		Unit	Remarks
				Min	Max		
Power supply rising time	t_R	V_{CC}	—	0.05	30	ms	
Power supply cut-off time	t_{OFF}	V_{CC}		4	—	ms	Due to repeated operations

Note : V_{CC} must be kept lower than 0.2 V before power-on.
The above values are used for causing a power-on reset.
Some registers in the device are initialized only upon a power-on reset. To initialize these registers, turn the power supply using the above values.

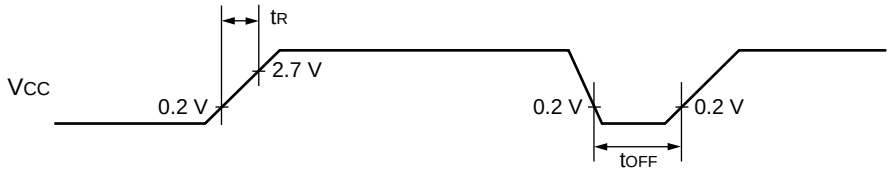

Sudden changes in the power supply voltage may cause a power-on reset.
To change the power supply voltage while the device is in operation, it is recommended to raise the voltage smoothly to suppress fluctuations as shown below.
In this case, change the supply voltage with the PLL clock not used. If the voltage drop is 1 V or fewer per second, however, you can use the PLL clock.

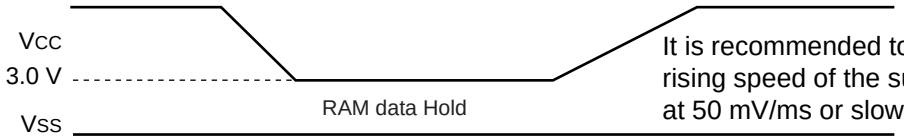

It is recommended to keep the rising speed of the supply voltage at 50 mV/ms or slower.

(4) UART0 to UART1

(V_{CC} = 5.0 V ± 10%, V_{SS} = AV_{SS} = 0.0 V, T_A = –40 °C to +85 °C)

Parameter	Symbol	Pin name	Condition	Value		Unit	Remarks
				Min	Max		
Serial clock cycle time	t_{SCYC}	SCK0 to SCK1	C_L = 80 pF + 1 TTL for an output pin of internal shift clock mode	8 t_{CP}	—	ns	
SCK ↓ → SOT delay time	t_{SLOV}	SCK0 to SCK1 SOT0 to SOT1		–80	80	ns	
Valid SIN → SCK ↑	t_{IVSH}	SCK0 to SCK1 SIN0 to SIN1		100	—	ns	
SCK ↑ → valid SIN hold time	t_{SHIX}	SCK0 to SCK1, SIN0 to SIN1		60	—	ns	
Serial clock “H” pulse width	t_{SHSL}	SCK0 to SCK1	C_L = 80 pF + 1 TTL for an output pin of external shift clock mode	4 t_{CP}	—	ns	
Serial clock “L” pulse width	t_{SLSH}	SCK0 to SCK1		4 t_{CP}	—	ns	
SCK ↓ → SOT delay time	t_{SLOV}	SCK0 to SCK1, SOT0 to SOT1		—	150	ns	
Valid SIN → SCK ↑	t_{IVSH}	SCK0 to SCK1, SIN0 to SIN1		60	—	ns	
SCK ↑ → valid SIN hold time	t_{SHIX}	SCK0 to SCK1, SIN0 to SIN1		60	—	ns	

Note :
- These are AC ratings in the CLK synchronous mode.
- CL is the load capacitance value connected to pins while testing.
- t_{CP} is machine cycle time (unit : ns) .

- Internal shift clock mode

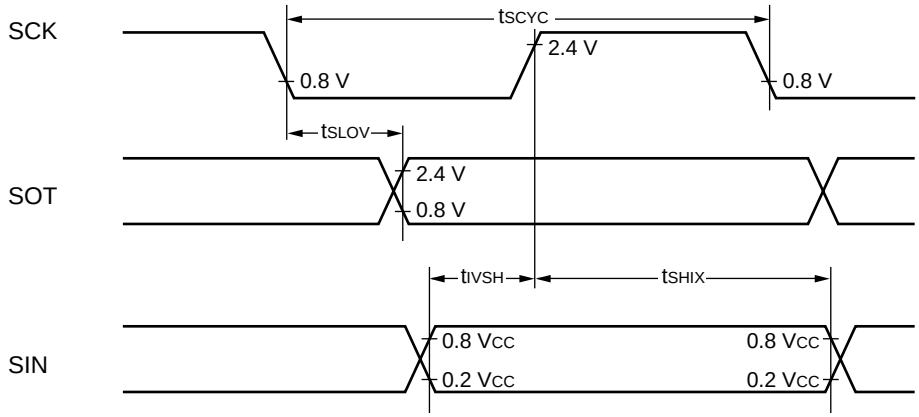

- External shift clock mode

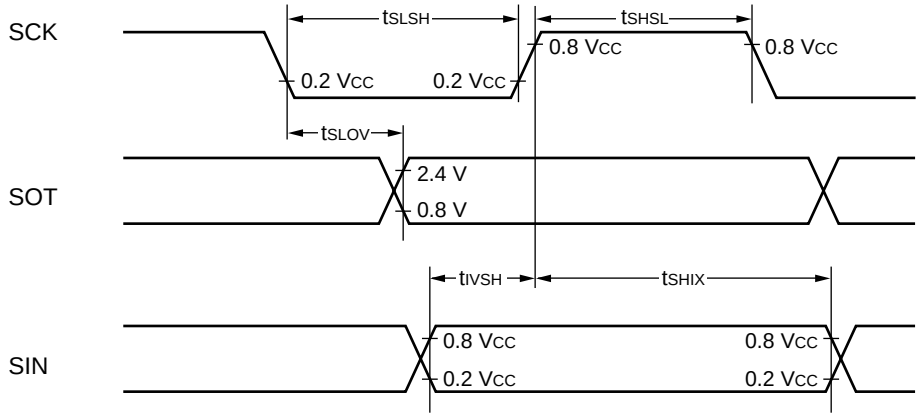

(5) Resources Input Timing

(V_{CC} = 5.0 V ± 10%, V_{SS} = AV_{SS} = 0.0 V, T_A = –40 °C to +85 °C)

Parameter	Symbol	Pin name	Condition	Value		Unit	Remarks
				Min	Max		
Input pulse width	t_{TIWH} t_{TIWL}	IN0 to IN3, SNI0 to SNI2 TIN0 to TIN1 PWI0 to PWI1 DTTI0, DTTI1	—	4 t_{CP}	—	ns	

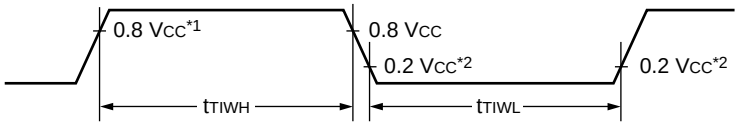

*1 : 0.7 V_{CC} for PWI0 input pin

*2 : 0.3 V_{CC} for PWI0 Input pin

(6) Resources Output Timing

(V_{CC} = 5.0 V ± 10%, V_{SS} = AV_{SS} = 0.0 V, T_A = –40 °C to +85 °C)

Parameter	Symbol	Pin name	Condition	Value		Unit	Remarks
				Min	Max		
CLK↑ → T_{OUT} transition time	t_{To}	PWO0 to PWOI1 PPG0 to PPG2 TO0 to TO1	—	30	—	ns	

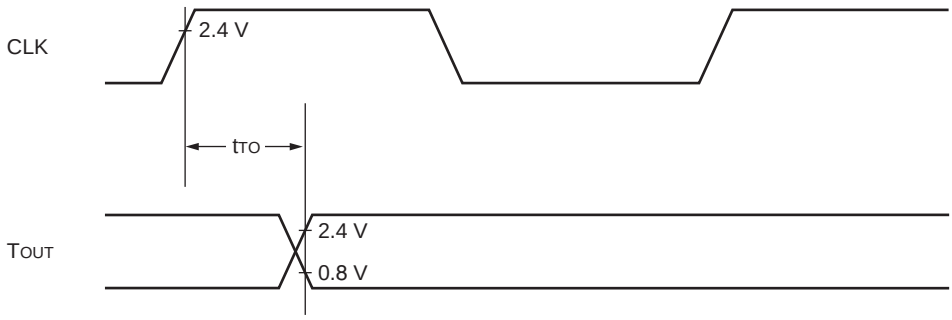

(7) Trigger Input Timimg

(V_{CC} = 5.0 V ± 10%, V_{SS} = AV_{SS} = 0.0 V, T_A = –40 °C to +85 °C)

Parameter	Symbol	Pin name	Condition	Value		Unit	Remarks
				Min	Max		
Input pulse width	t_{TRGH} t_{TRGL}	INT0 to INT7	—	5 t_{CP}	—	ns	

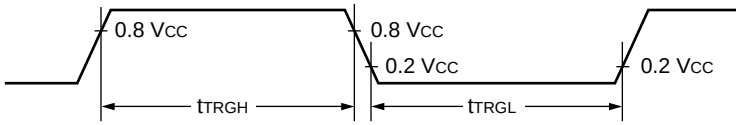

5. A/D Converter Electrical Characteristics

($3.0\ V \leq AVR - AV_{SS}$, $V_{CC} = AV_{CC} = 5.0\ V \pm 10\%$, $V_{SS} = AV_{SS} = 0.0\ V$, $T_A = -40\ °C$ to $+85\ °C$)

Parameter	Symbol	Pin name	Value Min	Value Typ	Value Max	Unit	Remarks
Resolution	—	—	—	10	—	bit	
Total error	—	—	—	—	±3.0	LSB	For MB90F462, MB90462, MB90F462A, MB90F463A, MB90467
	—	—	—	—	±5.0	LSB	For MB90V460
Non-linear error	—	—	—	—	±2.5	LSB	
Differential linearity error	—	—	—	—	±1.9	LSB	
Zero transition voltage	V_{OT}	AN0 to AN7	AV_{SS} – 1.5 LSB	AV_{SS} + 0.5 LSB	AV_{SS} + 2.5 LSB	V	For MB90F462, MB90462, MB90F462A, MB90F463A, MB90467
			AV_{SS} – 3.5 LSB	AV_{SS} + 0.5 LSB	AV_{SS} + 4.5 LSB	V	For MB90V460
Full-scale transition voltage	V_{FST}	AN0 to AN7	AVR – 3.5 LSB	AVR – 1.5 LSB	AVR + 0.5 LSB	V	For MB90F462, MB90462, MB90F462A, MB90F463A,MB90467
			AVR – 6.5 LSB	AVR – 1.5 LSB	AVR + 1.5 LSB	V	For MB90V460
Conversion time	—	—	6.125	—	1000	µs	Actual value is specified as a sum of values specified in ADCR0 : CT1, CT0 and ADCR0 : ST1, ST0. Be sure that the setting value is greater than the min value
Sampling period	—	—	2	—	—	µs	Actual value is specified in ADCR0 : ST1, ST0 bits. Be sure that the setting value is greater than the min value
Analog port input current	I_{AIN}	AN0 to AN7	—	—	10	µA	
Analog input voltage	V_{AIN}	AN0 to AN7	AV_{SS}	—	AVR	V	
Reference voltage	—	AVR	AV_{SS} + 2.7	—	AV_{CC}	V	
Power supply current	I_A	AV_{CC}	—	2.3	6	mA	For MB90F462, MB90F462A, MB90F463A, MB90462, MB90467
			—	2	5	mA	For MB90V460
	I_{AH}*		—	—	5	µA	*
Reference voltage supply current	IR	AVR	—	140	260	µA	For MB90F462, MB90462, MB90467
			—	600	900	µA	For MB90F462A, MB90F463A
			—	0.9	1.3	mA	For MB90V460
	I_{RH}*		—	—	5	µA	*
Offset between channels	—	AN0 to AN7	—	—	4	LSB	

* : The current when the A/D converter is not operating or the CPU is in stop mode (for $V_{CC} = AV_{CC} = AVR = 5.0\ V$)

6. A/D Converter Glossary

Resolution :	Analog changes that are identifiable with the A/D converter
Linearity error :	The deviation of the straight line connecting the zero transition point (“00 0000 0000” ←→ “000000 0001”) with the full-scale transition point (“11 1111 1110” ←→ “11 1111 1111”) from actual conversion characteristics
Differential linearity error :	The deviation of input voltage needed to change the output code by 1 LSB from the theoretical value
Total error :	The total error is defined as a difference between the actual value and the theoretical value, which includes zero-transition error/full-scale transition error and linearity error.

Total error

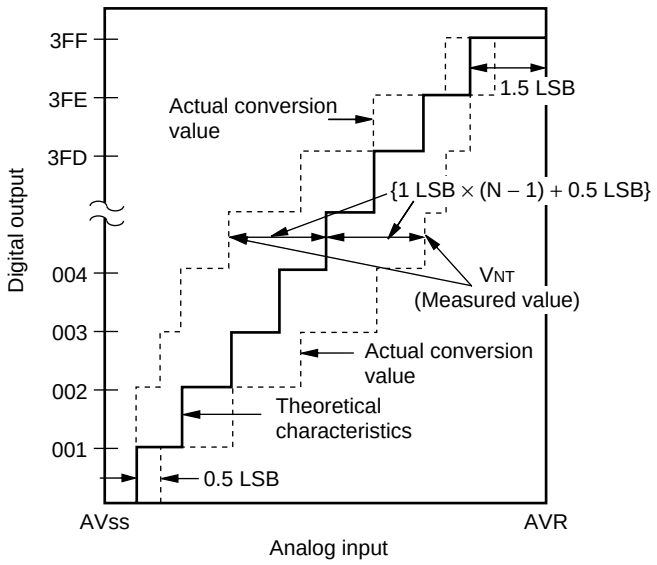

$$\text{Total error for digital output N} = \frac{V_{NT} - \{1\ \text{LSB} \times (N-1) + 0.5\ \text{LSB}\}}{1\ \text{LSB}}\ [\text{LSB}]$$

$$1\ \text{LSB} = (\text{Theoretical value})\ \frac{AVR - AV_{SS}}{1024}\ [\text{V}]$$

V_{OT} (Theoretical value) $= AV_{SS} + 0.5$ LSB [V]

V_{FST} (Theoretical value) $=$ AVR – 1.5 LSB [V]

V_{NT} : Voltage at a transition of digital output from (N – 1) to N

(Continued)

(Continued)

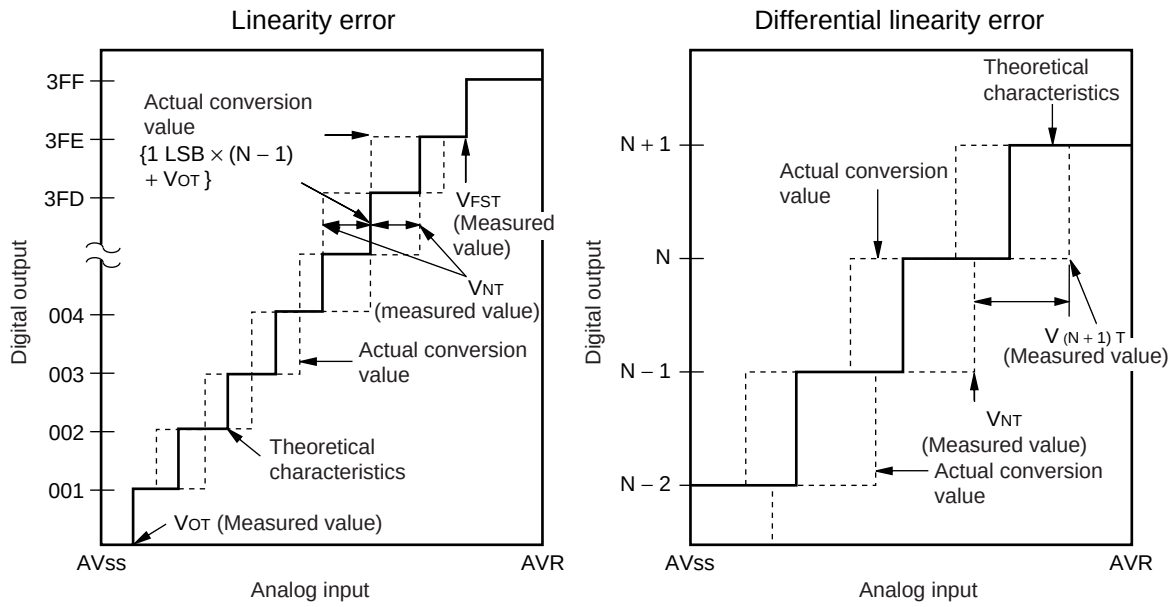

$$\text{Linearity error of digital output N} = \frac{V_{NT} - \{1\ \text{LSB} \times (N - 1) + V_{OT}\}}{1\ \text{LSB}}\ [\text{LSB}]$$

$$\text{Differential linearity error of digital output N} = \frac{V_{(N+1)T} - V_{NT}}{1\ \text{LSB}} - 1\ [\text{LSB}]$$

$$1\ \text{LSB} = \frac{V_{FST} - V_{OT}}{1022}\ [\text{V}]$$

V_{OT} : Voltage at transition of digital output from “000_H” to “001_H”
V_{FST} : Voltage at transition of digital output from “$3FE_H$” to “$3FF_H$”

7. Notes on Using A/D Converter

Select the output impedance value for the external circuit of analog input according to the following conditions.

Output impedance values of the external circuit recommends about 5 kΩ or lower (sampling period = 2.0 µs @machine clock of 16 MHz) .

When capacitors are connected to external pins, the capacitance of several thousand times the internal capacitor value is recommended to minimized the effect of voltage distribution between the external capacitor and internal capacitor.

When the output impedance of the external circuit is too high, the sampling period for analog voltages may not be sufficient.

- Analog input circuit model

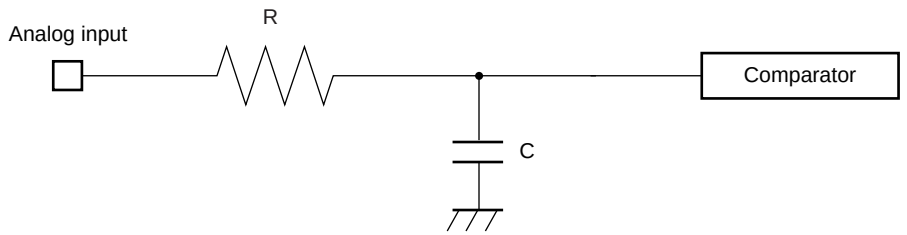

MB90462, MB90F462, MB90467	R ≅ 2.6 KΩ, C ≅ 28 pF
MB90F462A,MB90F463A	R ≅ 1.95KΩ C ≅ 17 pF
MB90V460	R ≅ 3.2 KΩ, C ≅ 30 pF

Note : Listed values must be considered as standards.

- Error

The smaller the absolute value of | AVR – AV_{SS} |, the greater the error would become relatively.

8. Flash Memory Program and Erase Performances

Parameter	Condition	Value			Unit	Remarks
		Min	Typ	Max		
Sector erase time	T_A = + 25 °C V_{CC} = 3.0 V	—	1	15	s	Excludes 00H programming prior erasure
Chip erase time		—	5	—	s	Excludes 00 H programming prior erasure
Word (16 bit width) programming time		—	16	3,600	µs	Excludes system-level overhead
Erase/Program cycle	—	10,000	—	—	cycle	

■ EXAMPLE CHARACTERISTICS

- Power Suppy Current of MB90462, MB90467

I_{CCH} vs. V_{CC}
T_A = 25 °C, external clock input

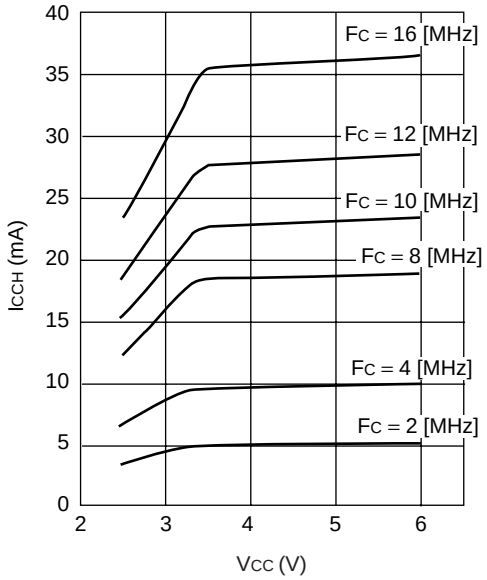

I_{CCS} vs. V_{CC}
T_A = 25 °C, external clock input

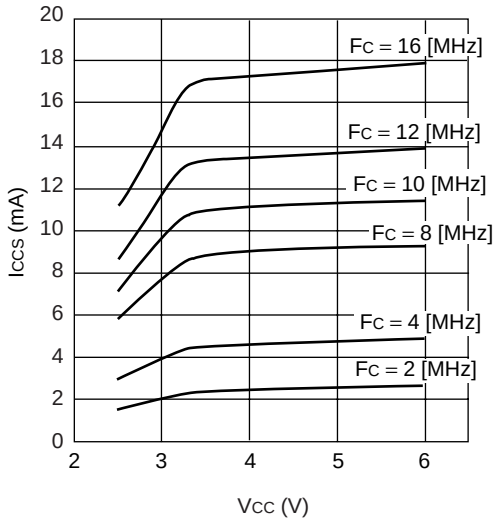

$V_{CC} - V_{OH}$ vs. I_{OH}
T_A = 25 °C, V_{CC} = 4.5 V

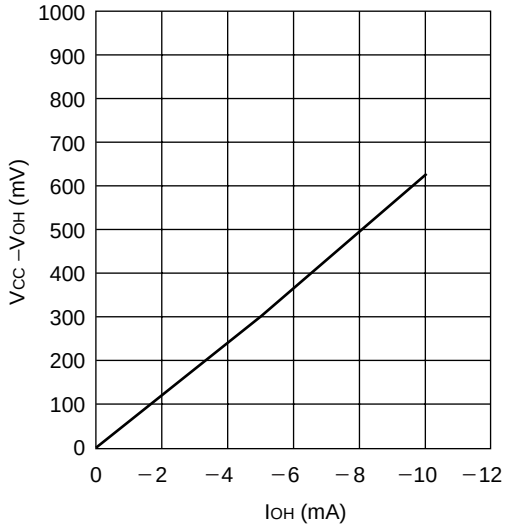

V_{OL} vs. I_{OL}
T_A = 25 °C, V_{CC} = 4.5 V

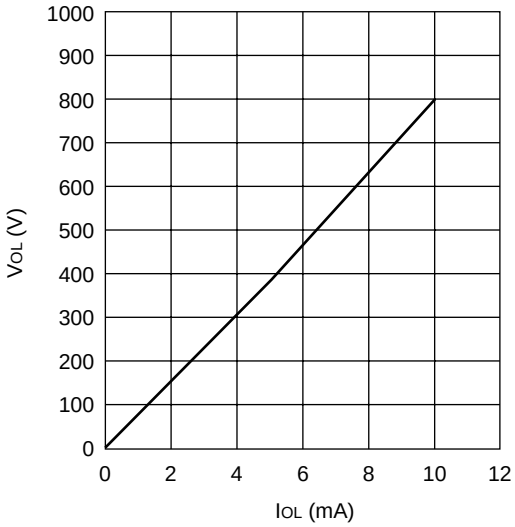

- Power Suppy Current of MB90F462

I_{CCH} vs. V_{CC}
T_A = 25 °C, external clock input

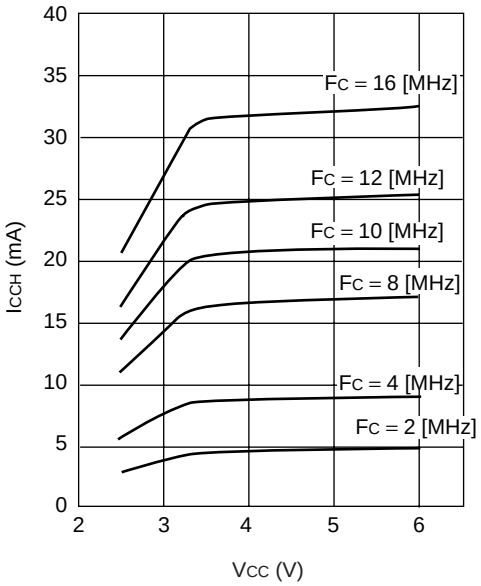

I_{CCS} vs. V_{CC}
T_A = 25 °C, external clock input

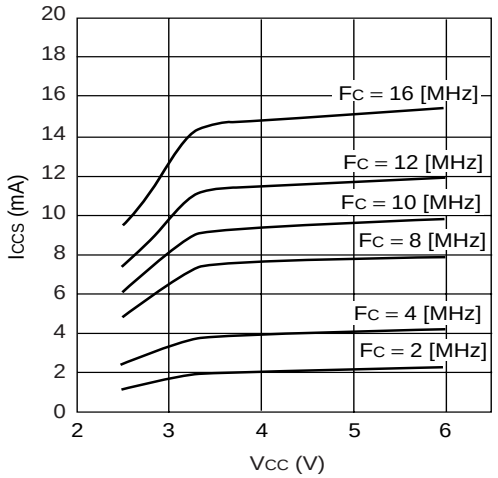

V_{CC} – V_{OH} vs. I_{OH}
T_A = 25 °C, V_{CC} = 4.5 V

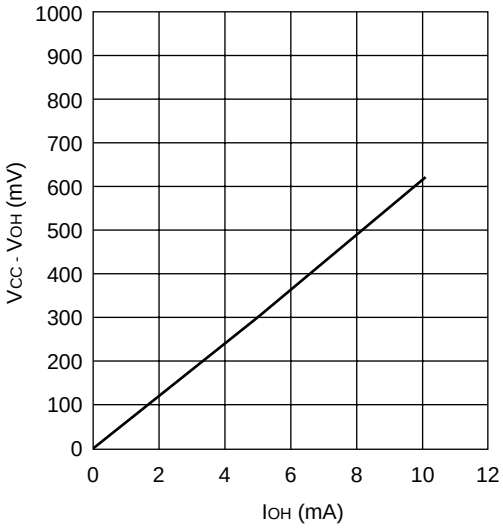

V_{OL} vs. I_{OL}
T_A = 25 °C, V_{CC} = 4.5 V

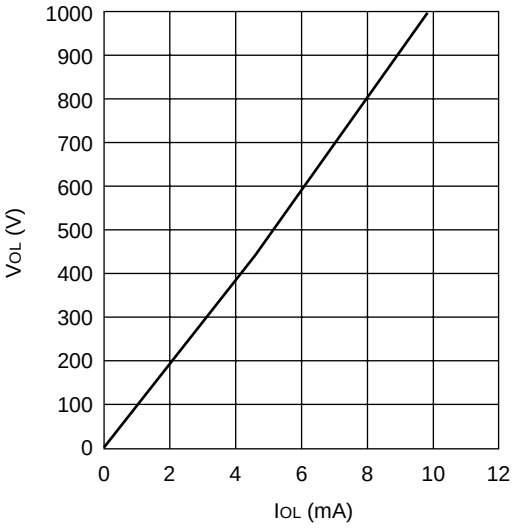

- Power Suppy Current of MB90F462A/F463A

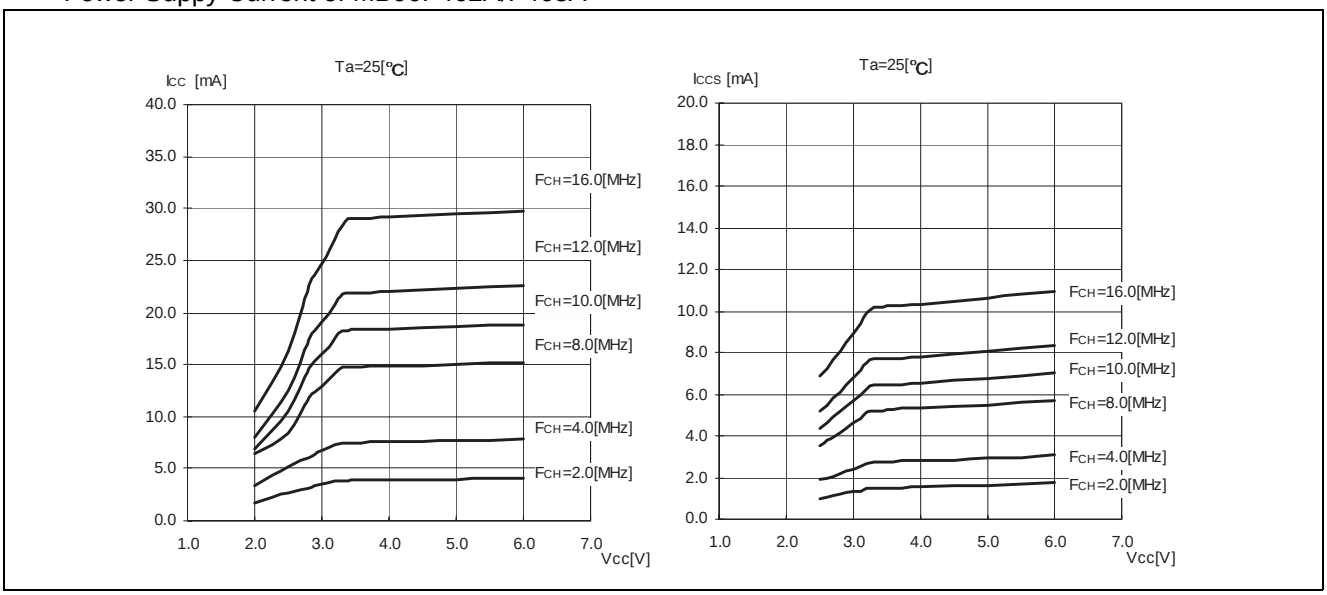

- Output Voltage of MB90F462A/F463A

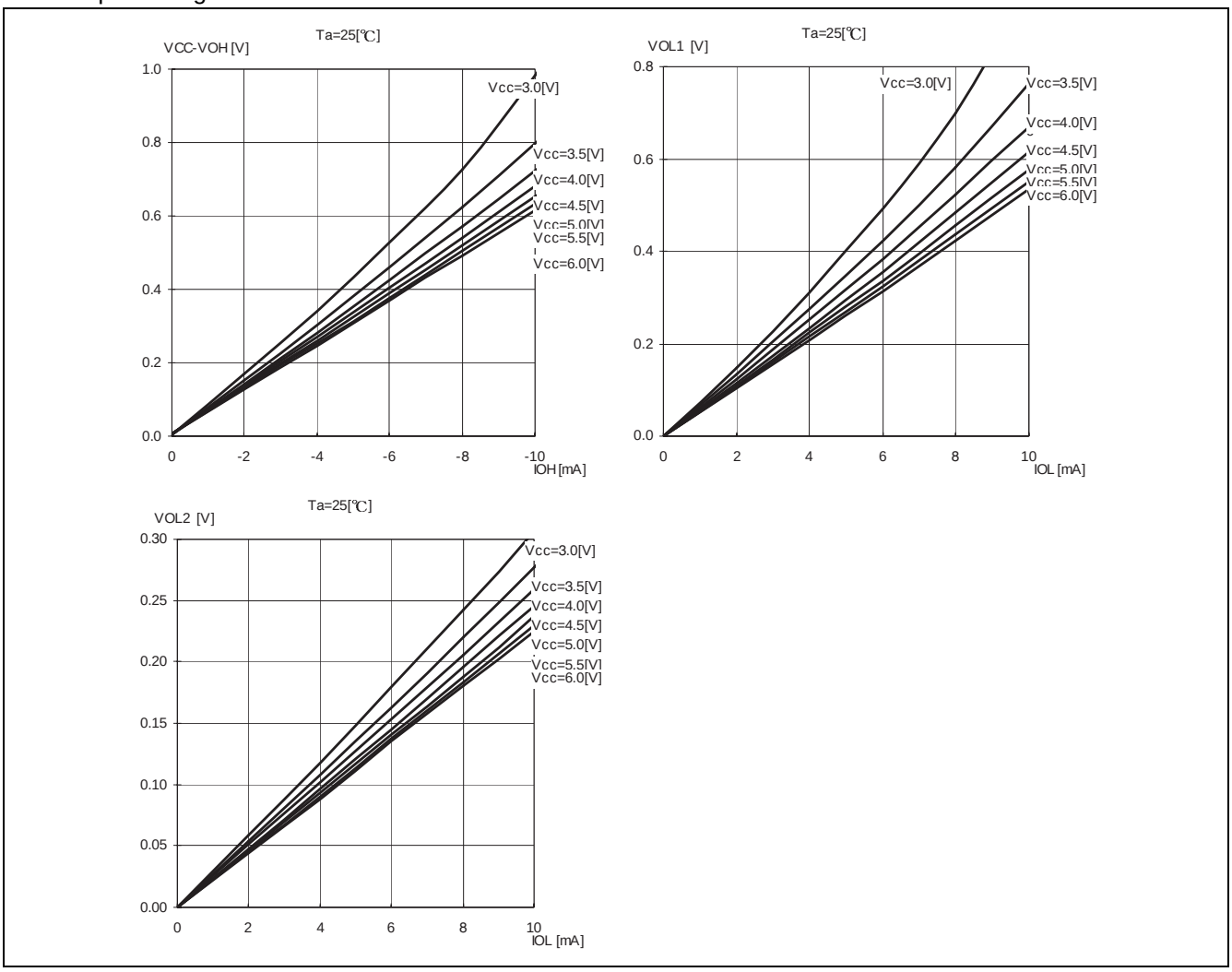

■ ORDERING INFORMATION

Part number	Package	Remarks
MB90F462PMC MB90F462APMC MB90F463APMC MB90462PMC MB90467PMC	64-pin Plastic LQFP (FPT-64P-M23)	
MB90F462PF MB90F462APF MB90F463APF MB90462PF MB90467PF	64-pin Plastic QFP (FPT-64P-M06)	
MB90F462P-SH MB90F462AP-SH MB90F463AP-SH MB90462P-SH MB90467P-SH	64-pin Plastic SH-DIP (DIP-64P-M01)	

■ PACKAGE DIMENSIONS

64-pin plastic QFP		
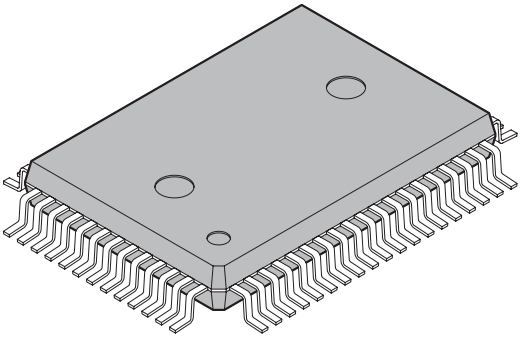	Lead pitch	1.00 mm
	Package width × package length	14 × 20 mm
	Lead shape	Gullwing
	Sealing method	Plastic mold
	Mounting height	3.35 mm MAX
	Code (Reference)	P-QFP64-14×20-1.00
(FPT-64P-M06)		

64-pin plastic QFP
(FPT-64P-M06)

Note 1) * : These dimensions do not include resin protrusion.
Note 2) Pins width and pins thickness include plating thickness.
Note 3) Pins width do not include tie bar cutting remainder.

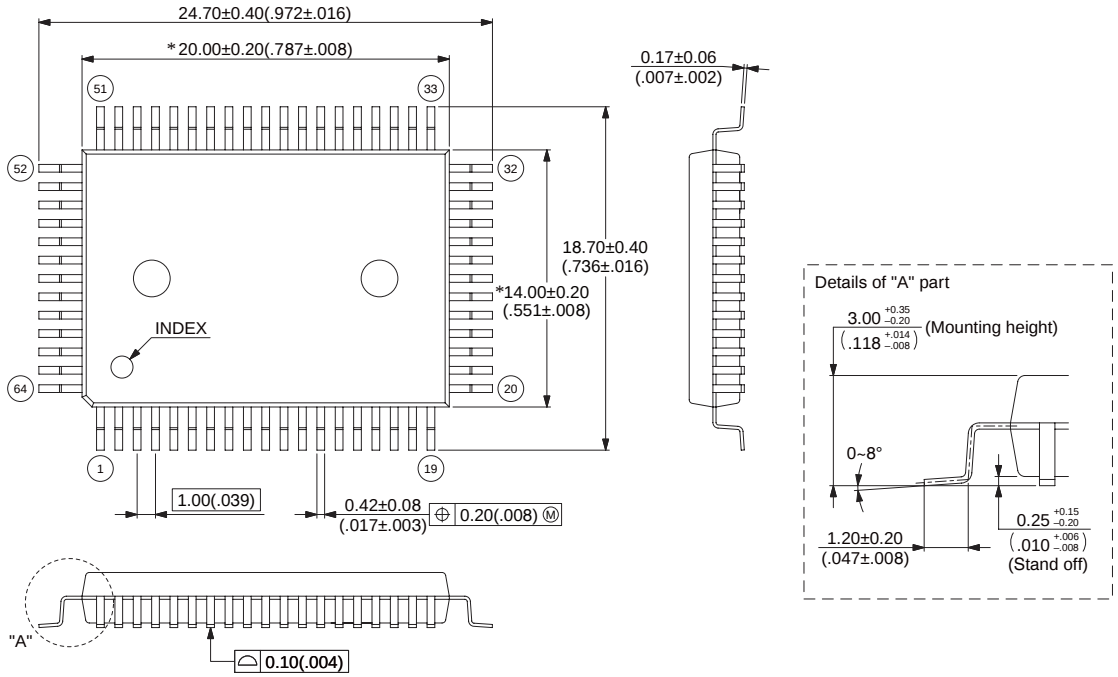

© 2003-2008 FUJITSU MICROELECTRONICS LIMITED F64013S-c-5-6

Dimensions in mm (inches).
Note: The values in parentheses are reference values.

Please confirm the latest Package dimension by following URL.
http://edevice.fujitsu.com/package/en-search/

(Continued)

64-pin plastic LQFP		
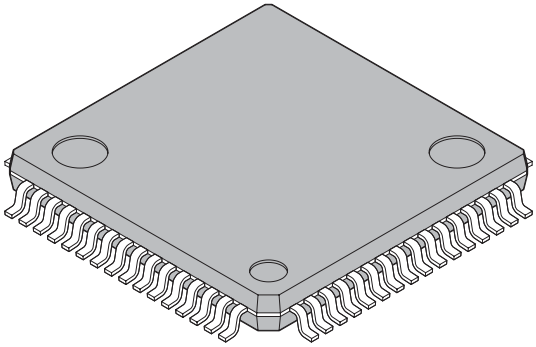	Lead pitch	0.65 mm
	Package width × package length	12.0 × 12.0 mm
	Lead shape	Gullwing
	Sealing method	Plastic mold
	Mounting height	1.70 mm MAX
	Code (Reference)	P-LFQFP64-12×12-0.65
(FPT-64P-M23)		

64-pin plastic LQFP
(FPT-64P-M23)

Note 1) * : These dimensions do not include resin protrusion.
Note 2) Pins width and pins thickness include plating thickness.
Note 3) Pins width do not include tie bar cutting remainder.

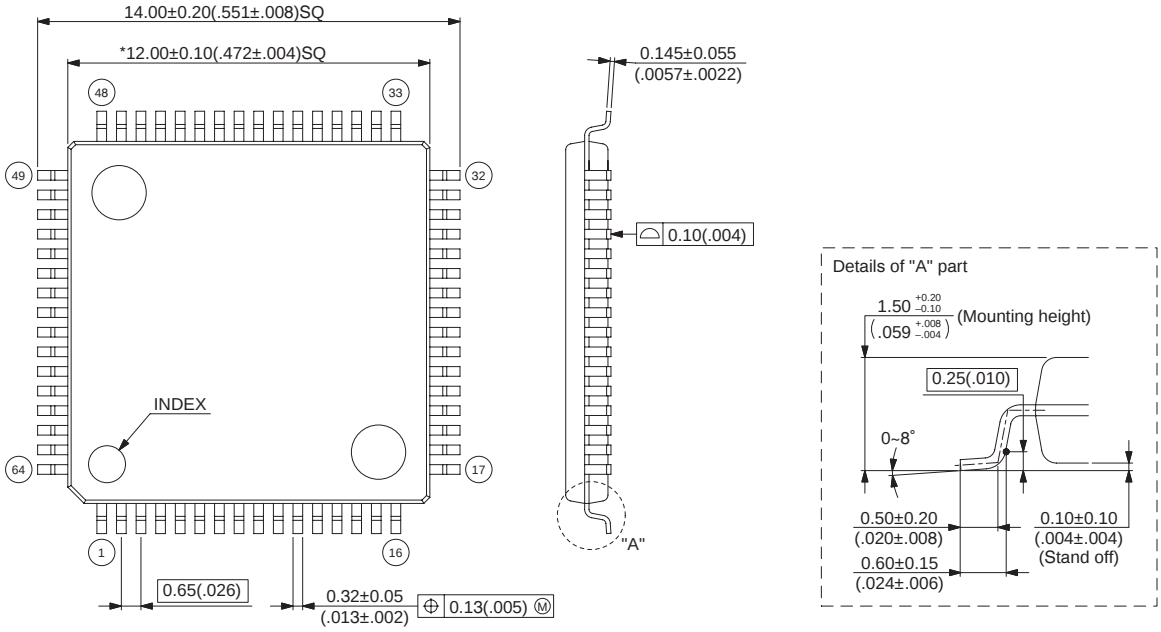

©2003-2008 FUJITSU MICROELECTRONICS LIMITED F64034S-c-1-2

Dimensions in mm (inches).
Note: The values in parentheses are reference values

Please confirm the latest Package dimension by following URL.
http://edevice.fujitsu.com/package/en-search/

(Continued)

(Continued)

64-pin plastic SH-DIP		
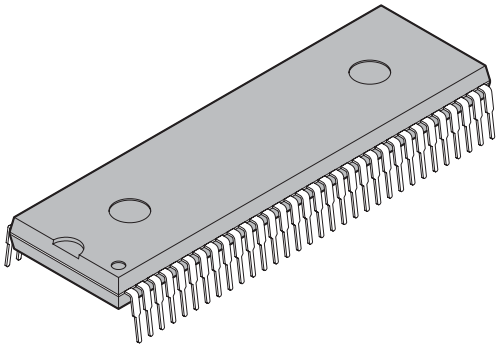	Lead pitch	1.778mm(70mil)
	Package width × package length	17 × 58 mm
	Sealing method	Plastic mold
	Mounting height	5.65 mm MAX
(DIP-64P-M01)		

64-pin plastic SH-DIP
(DIP-64P-M01)

Note: Pins width and pins thickness include plating thickness.

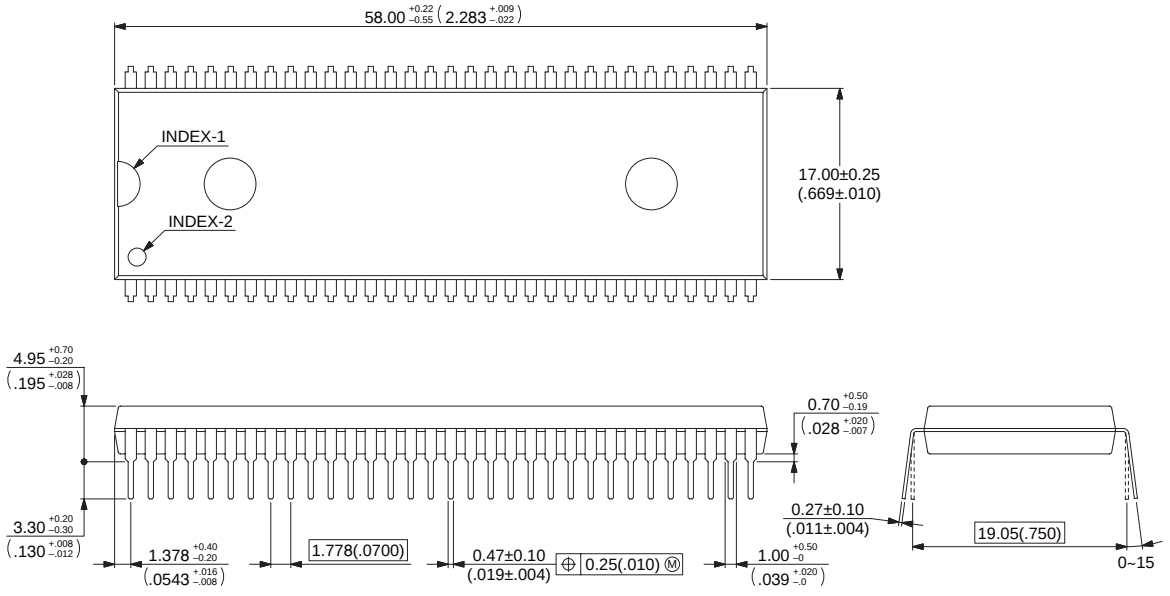

© 2001-2008 FUJITSU MICROELECTRONICS LIMITED D64001S-c-4-6

Dimensions in mm (inches).
Note: The values in parentheses are reference values.

Please confirm the latest Package dimension by following URL.
http://edevice.fujitsu.com/package/en-search/

■ MAIN CHANGES IN THIS EDITION

Page	Section	Change Results
—	—	Changed the series name; MB90460 series→MB90460/465 series
—	—	Added the part number; MB90F462A, MB90F463A
—	—	Changed the package. (FPT-64P-M09 →FPT-64P-M23)
61, 62	■ PERIPHERAL RESOURCES 16. 512/1024 Kbit Flash Memory	Added the 1024 Kbit flash memory.
74	■ ELECTRICAL CHARACTERISTICS 4. AC Characteristics	Added the “(6) Resources Output Timing”
76	■ ELECTRICAL CHARACTERISTICS 5. A/D Converter Electrical Characteristics	Changed the unit of “Zero transition voltage” and “Full-scale transition voltage”; mV → V
83	■ ORDERING INFORMATION	Changed the part number; MB90462PFM →MB90462PMC MB90467PFM →MB90467PMC MB90F462PFM →MB90F462PMC
85	■ PACKAGE DIMENSIONS	Changed the figure of package. FPT-64P-M09 →FPT-64P-M23

The vertical lines marked in the left side of the page show the changes.

FUJITSU MICROELECTRONICS LIMITED

7-1, Nishishinjuku 2-chome, Shinjuku Dai-Ichi Seimei Bldg.,
Shinjuku-ku, Tokyo 163-0722, JAPAN
Tel: +81-3-5322-3347 Fax: +81-3-5322-3387
http://jp.fujitsu.com/fml/en/

For further information please contact:

North and South America
FUJITSU MICROELECTRONICS AMERICA, INC.
1250 E. Arques Avenue, M/S 333
Sunnyvale, CA 94085-5401, U.S.A.
Tel: +1-408-737-5600 Fax: +1-408-737-5999
http://www.fma.fujitsu.com/

Europe
FUJITSU MICROELECTRONICS EUROPE GmbH
Pittlerstrasse 47, 63225 Langen, F. R. GERMANY
Tel: +49-6103-690-0 Fax: +49-6103-690-122
http://emea.fujitsu.com/microelectronics/

Korea
FUJITSU MICROELECTRONICS KOREA LTD.
1002 Daechi-Dong, 206 KOSMO TOWER,
Kangnam-Gu, Seoul 135-280, KOREA
Tel: +82-2-3484-7100 Fax: +82-2-3484-7111
http://www.fmk.fujitsu.com/

Asia Pacific
FUJITSU MICROELECTRONICS ASIA PTE LTD.
151 Lorong Chuan, #05-08 New Tech Park,
Singapore 556741, SINGAPORE
Tel: +65-6281-0770 Fax: +65-6281-0220
http://www.fujitsu.com/sg/services/micro/semiconductor/

FUJITSU MICROELECTRONICS SHANGHAI CO., LTD.
No.222 Yan An Road(E), Rm.3102, Bund Center,
Shanghai 200002, P. R. CHINA
Tel: +86-21-6335-1560 Fax: +86-21-6335-1605
http://cn.fujitsu.com/fmc/

FUJITSU MICROELECTRONICS PACIFIC ASIA LTD.
11 Canton Road, 10/F., World Commerce Centre,
Tsimshatsui, Kowloon, HONG KONG
Tel: +852-2377-0226 Fax: +852-2376-3269
http://cn.fujitsu.com/fmc/tw

All Rights Reserved.

The contents of this document are subject to change without notice.
Customers are advised to consult with sales representatives before ordering.
The information, such as descriptions of function and application circuit examples, in this document are presented solely for the purpose of reference to show examples of operations and uses of FUJITSU MICROELECTRONICS device; FUJITSU MICROELECTRONICS does not warrant proper operation of the device with respect to use based on such information. When you develop equipment incorporating the device based on such information, you must assume any responsibility arising out of such use of the information.
FUJITSU MICROELECTRONICS assumes no liability for any damages whatsoever arising out of the use of the information.
Any information in this document, including descriptions of function and schematic diagrams, shall not be construed as license of the use or exercise of any intellectual property right, such as patent right or copyright, or any other right of FUJITSU MICROELECTRONICS or any third party or does FUJITSU MICROELECTRONICS warrant non-infringement of any third-party's intellectual property right or other right by using such information. FUJITSU MICROELECTRONICS assumes no liability for any infringement of the intellectual property rights or other rights of third parties which would result from the use of information contained herein.
The products described in this document are designed, developed and manufactured as contemplated for general use, including without limitation, ordinary industrial use, general office use, personal use, and household use, but are not designed, developed and manufactured as contemplated (1) for use accompanying fatal risks or dangers that, unless extremely high safety is secured, could have a serious effect to the public, and could lead directly to death, personal injury, severe physical damage or other loss (i.e., nuclear reaction control in nuclear facility, aircraft flight control, air traffic control, mass transport control, medical life support system, missile launch control in weapon system), or (2) for use requiring extremely high reliability (i.e., submersible repeater and artificial satellite).
Please note that FUJITSU MICROELECTRONICS will not be liable against you and/or any third party for any claims or damages arising in connection with above-mentioned uses of the products.
Any semiconductor devices have an inherent chance of failure. You must protect against injury, damage or loss from such failures by incorporating safety design measures into your facility and equipment such as redundancy, fire protection, and prevention of over-current levels and other abnormal operating conditions.
Exportation/release of any products described in this document may require necessary procedures in accordance with the regulations of the Foreign Exchange and Foreign Trade Control Law of Japan and/or US export control laws.
The company names and brand names herein are the trademarks or registered trademarks of their respective owners.

Edited Business & Media Promotion Dept.