Continental Device India Limited

An ISO/TS 16949, ISO 9001 and ISO 14001 Certified Company

NPN PLASTIC POWER TRANSISTOR

CDL13007

TO-220
Plastic Package

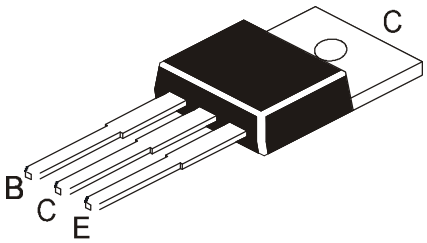

Used in Energy Saving Lights and Power Switch Circuits

ABSOLUTE MAXIMUM RATINGS

DESCRIPTION	SYMBOL	VALUE	UNIT
Collector Base Voltage	V_{CBO}	700	V
Collector Emitter Voltage	V_{CEO}	400	V
Emitter Base Voltage	V_{EBO}	9	V
Collector Current Continuous	I_C	8	A
Power Dissipation upto T_a=25ºC	P_D	2	W
Power Dissipation upto T_c=25ºC	P_D	80	W
Operating and Storage Junction Temperature Range	T_j, T_{stg}	- 55 to +150	ºC

ELECTRICAL CHARACTERISTICS (T_c=25ºC unless specified otherwise)

DESCRIPTION	SYMBOL	TEST CONDITION	MIN	TYP	MAX	UNIT
Collector Cut Off Current	I_{CBO}	V_{CB}=700V, I_E=0			1.0	mA
Emitter Cut Off Current	I_{EBO}	V_{EB}=9V, I_C=0			1.0	mA
DC Current Gain	*h_{FE}	I_C=2A, V_{CE}=5V (Note1)	8		40	
Ratio Between h_{FE1} of Low Current and h_{FE2} of High Current	h_{FE1}/h_{FE2}	h_{FE1} I_C=5mA, V_{CE}=5V h_{FE2} I_C=2A, V_{CE}=5V	0.75			
Collector Emitter Saturation Voltage	*$V_{CE\ (sat)}$	I_C=5A, I_B=1A			1.5	V
Base Emitter Saturation Voltage	*$V_{BE\ (sat)}$	I_C=5A, I_B=1A			1.5	V
Transition Frequency	f_T	V_{CE}=10V, I_C=500mA, f=1MHz	4			MHz

Switching Time

DESCRIPTION	SYMBOL	TEST CONDITION	MIN	TYP	MAX	UNIT
Fall Time	t_f	I_C=2A, I_{B1}= -1_{B2}=0.4A			0.8	µs
Storage Time	t_s	V_{CC}=120V			3.6	µs

*h_{FE} Classification	A : 08 - 17	B : 16 - 25	C : 24 - 33	E : 32 - 40
Marking Product is pre-selected in DC Current Gain (Groups A to E). CDIL reserves the right to ship any of the group(s) to customers depending on production availability. XX=date code	CDL 13007A XX	CDL 13007B XX	CDL 13007C XX	CDL 13007E XX

***Pulse test t_p ≤300µs, duty cycle ≤2%**

CDL13007Rev_2 130106E

TO-220 Plastic Package

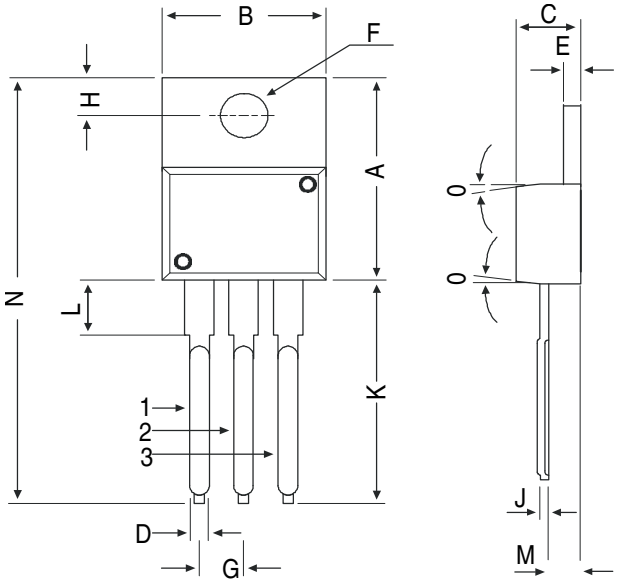

DIM	MIN	MAX
A	14.42	16.51
B	9.63	10.67
C	3.56	4.83
D	—	0.90
E	1.15	1.40
F	3.75	3.88
G	2.29	2.79
H	2.54	3.43
J	—	0.56
K	12.70	14.73
L	2.80	4.07
M	2.03	2.92
N	—	31.24
O	7 DEG	

All diminsions in mm.

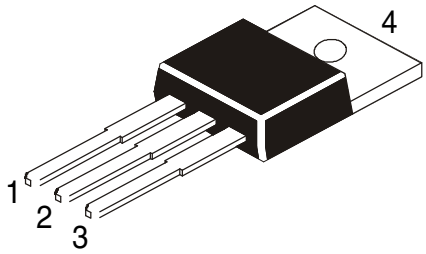

Pin Configuration
1. Base
2. Collector
3. Emitter
4. Collector

TO-220 Tube Packing

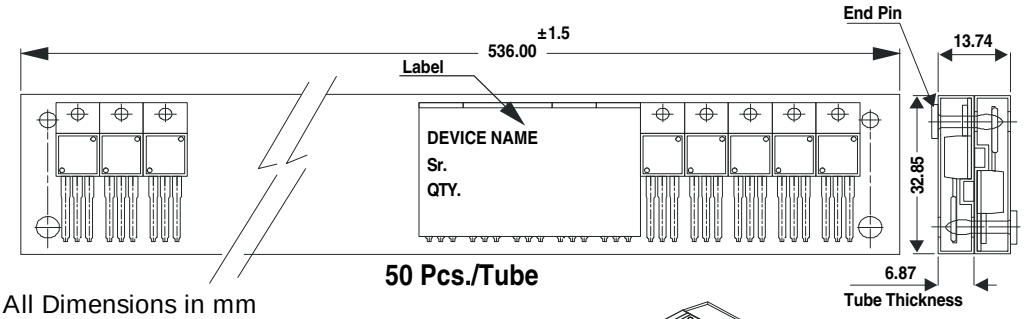

50 Pcs./Tube

All Dimensions in mm

AMMO PACK SIZE

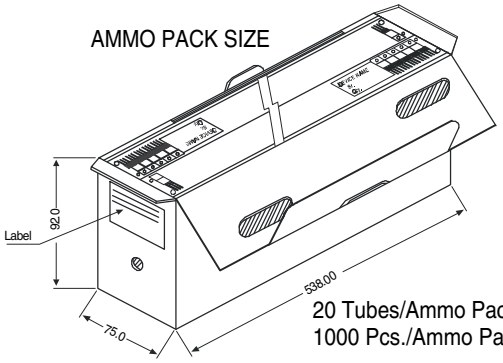

20 Tubes/Ammo Pack
1000 Pcs./Ammo Pack

Packing Detail

PACKAGE	STANDARD PACK		INNER CARTON BOX		OUTER CARTON BOX		
	Details	**Net Weight/Qty**	**Size**	**Qty**	**Size**	**Qty**	**Gr Wt**
TO-220 / FP	**200 pcs/polybag**	**396 gm/200 pcs**	**3" x 7.5" x 7.5"**	**1.0K**	**17" x 15" x 13.5"**	**16.0K**	**36 kgs**
	50 pcs/tube	**120 gm/50 pcs**	**3.5" x 3.7" x 21.5"**	**1.0K**	**19" x 19" x 19"**	**10.0K**	**29 kgs**

CDL13007Rev_2 130106E

Component Disposal Instructions

1. CDIL Semiconductor Devices are RoHS compliant, customers are requested to please dispose as per prevailing Environmental Legislation of their Country.

2. In Europe, please dispose as per EU Directive 2002/96/EC on Waste Electrical and Electronic Equipment (WEEE).

Disclaimer

The product information and the selection guides facilitate selection of the CDIL's Semiconductor Device(s) best suited for application in your product(s) as per your requirement. It is recommended that you completely review our Data Sheet(s) so as to confirm that the Device(s) meet functionality parameters for your application. The information furnished in the Data Sheet and on the CDIL Web Site/CD are believed to be accurate and reliable. CDIL however, does not assume responsibility for inaccuracies or incomplete information. Furthermore, CDIL does not assume liability whatsoever, arising out of the application or use of any CDIL product; neither does it convey any license under its patent rights nor rights of others. These products are not designed for use in life saving/support appliances or systems. CDIL customers selling these products (either as individual Semiconductor Devices or incorporated in their end products), in any life saving/support appliances or systems or applications do so at their own risk and CDIL will not be responsible for any damages resulting from such sale(s).

CDIL strives for continuous improvement and reserves the right to change the specifications of its products without prior notice.

CDIL is a registered Trademark of
Continental Device India Limited
C-120 Naraina Industrial Area, New Delhi 110 028, India.
Telephone + 91-11-2579 6150, 4141 1112 Fax + 91-11-2579 5290, 4141 1119
email@cdil.com www.cdilsemi.com

CDL13007Rev_2 130106E