712S270
Composite EMI/RFI Single Shield Termination
Conduit Fitting
For Glenair Series 74 Helical Convoluted Tubing

Glenair®

Basic Part Number	Conduit Fitting Shell Size (*See Table I*)		Product Series *K - For use with PEEK conduit material.* (*Omit for PFA, ETFE, FEP or PTFE*)	
712S270	XM	03	24	K
	Finish Symbol (*See Table III*)	Tubing Size (*See Table II*)		

TABLE III

Symbol	Finish Description
XB	No Plating - Black Color (Non-Conductive Finish)
XM	2000 Hour Corrosion Resistant Electroless Nickel
XMT	2000 Hour Corrosion Resistant Ni-PTFE, Nickel-Fluorocarbon Polymer. *1000 Hour Grey™*
XO	No Plating - Brown Color (Non-Conductive Finish)
XW	2000 Hour Corrosion Resistant Cadmium/Olive Drab over Electroless Nickel

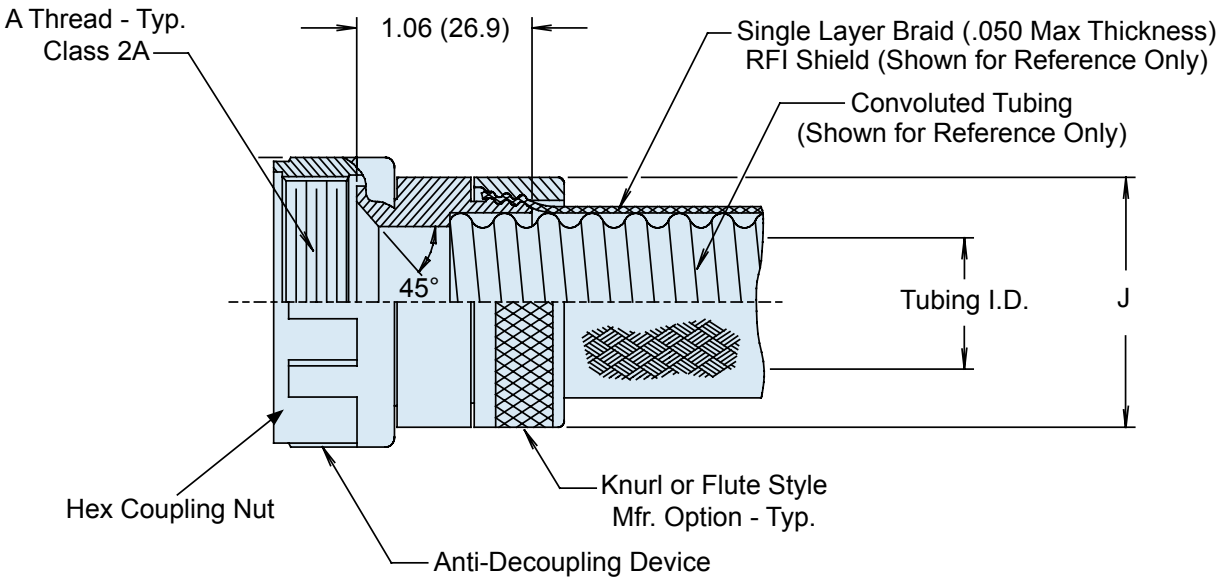

TABLE I: CONDUIT FITTING SHELL SIZE

Shell Size	A Thread Unified	Max Conduit Size Table 2	Weight in Pounds Max.
01	.750 - 20	16	.035
02	1.000 - 20	24	.047
03	1.312 - 18	32	.062
04	1.500 - 18	40	.077
05	2.000 - 18	64	.104
06	.500 - 20	09	.030
07	.625 - 24	12	.031

TABLE II: TUBING SIZE

Tubing Size	Conduit I.D.		J Dia Max	
06	.188	(4.8)	.790	(20.1)
09	.281	(7.1)	.985	(25.0)
10	.312	(7.9)	.985	(25.0)
12	.375	(9.5)	1.035	(26.3)
14	.437	(11.1)	1.100	(27.9)
16	.500	(12.7)	1.160	(29.5)
20	.625	(15.9)	1.285	(32.6)
24	.750	(19.1)	1.480	(37.6)
28	.875	(22.2)	1.670	(42.4)
32	1.000	(25.4)	1.720	(43.7)
40	1.250	(31.8)	2.100	(53.3)
48	1.500	(38.1)	2.420	(61.5)
56	1.750	(44.5)	2.660	(67.6)
64	2.000	(50.8)	2.910	(73.9)

APPLICATION NOTES

1. Metric dimensions (mm) are in parentheses and are for reference only.
2. Convoluted tubing to be ordered seperately. See Type B, D and E.
3. Mates to 710-318, -319, -320 and -321 transitions
4. Coupling nut supplied unplated.

© 2009 Glenair, Inc. CAGE Code 06324 Printed in U.S.A.