230-040
MIL-DTL-26500 Type Hermetic Class Receptacle
Single Hole Mount, Threaded Coupling, MS24265 Type

How To Order: *Commercial*

230-040	Z1	12	-	3	P	6
Basic Series	Connector Material / Finish	Shell Size		Insert Arrangement	Contact Termination	Alternate Key Position

Connector Material / Finish
FT - Carbon Steel - Fused Tin Finish
Z1 - Stainless Steel - Passivate Finish
ZL - Stainless Steel - Nickel Plated

Insert Arrangement
Per MIL-STD-1554
See Pages F-2 – F-3

Alternate Key Position
6, 7, 8, 9, 10
(Omit for Normal)

Basic Series

Shell Size
See Table I

Contact Termination
P - Pin, Solder Cup
X - Pin, Eyelet

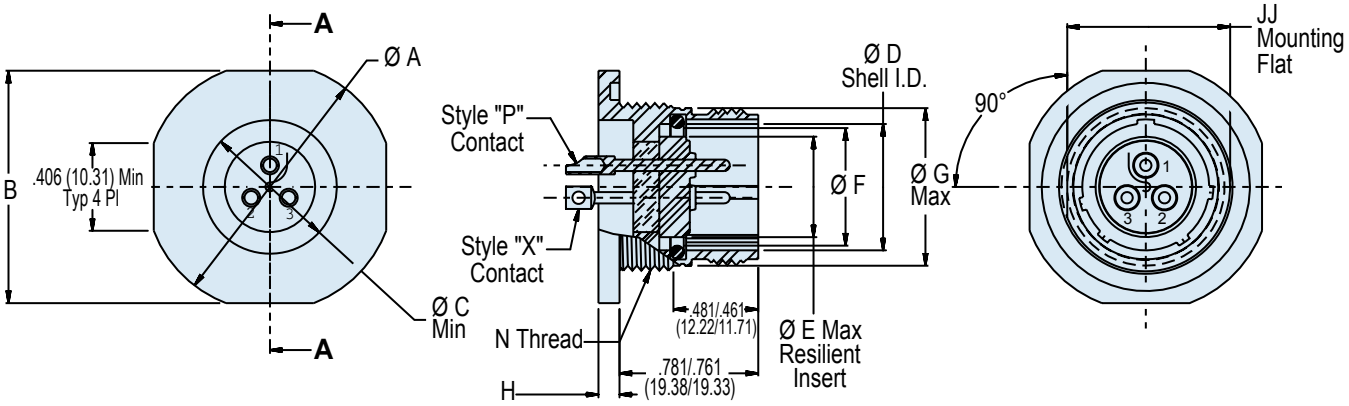

Section A-A

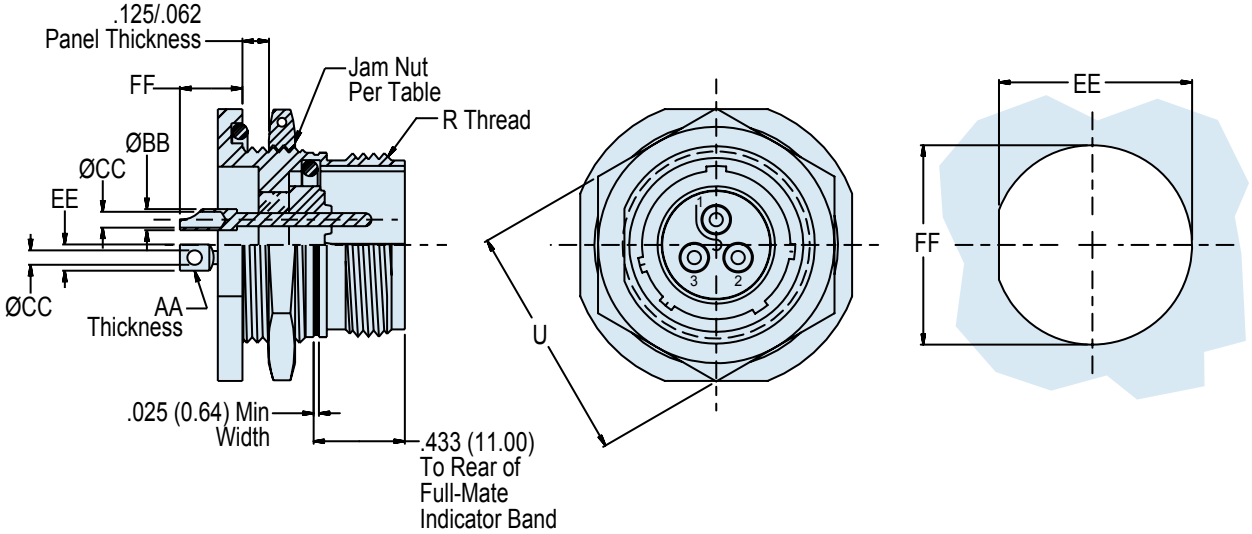

Dimensions in Inches (millimeters) are subject to change without notice.

© 2013 Glenair, Inc. U.S. CAGE Code 06324 Printed in U.S.A.

230-040
MIL-DTL-26500 Type Hermetic Class Receptacle
Single Hole Mount, Threaded Coupling, MS24265 Type

Glenair®

TABLE I: Shell Size, Connector Dimensions and Panel Cut-Out

Shell Size	Ø A Max	B	Ø D Shell I.D.	Ø E Resilient Insert	Ø G Max	H Flange Thickness	N Thread	R Thread	JJ Mounting Flat	Panel Cut-Out EE	Panel Cut-Out FF	U Hex Max
8	1.068 (27.1)	.984/.974 (24.99/24.74)	.433/.428 (11.0/10.9)	.318 (8.08)	.561 (14.2)	.137/.097 (3.48/2.46)	.625-20 UN-2A	.562-24 UNEF-2A	.596/.590 (15.1/15.0)	.605 (15.37)	.635 (16.1)	.828 (21.03)
10	1.192 (30.3)	1.109/1.099 (28.17/27.91)	.535/.530 (13.6/13.5)	.394 (10.01)	.696 (17.7)	.137/.097 (3.48/2.46)	.750-20 UNEF 2A	.687-24 UNEF 2A	.721/.715 (18.3/18.2)	.730 (18.54)	.760 (19.3)	.953 (24.21)
12	1.380 (35.1)	1.296/1.286 (32.92/32.66)	.705/.700 (17.9/17.8)	.564 (14.33)	.875 (22.2)	.137/.097 (3.48/2.46)	.937-20 UNEF-2A	.875-20 UNEF-2A	.908/.902 (23.1/22.9)	.917 (23.29)	.947 (24.1)	1.140 (28.96)
14	1.505 (38.2)	1.399/1.386 (35.53/35.20)	.774/.769 (19.7/19.5)	.633 (16.08)	.935 (23.7)	.137/.097 (3.48/2.46)	1.000-20 UNEF-2A	.937-20 UNEF-2A	.971/.965 (24.7/24.5)	.980 (24.89)	1.010 (25.7)	1.250 (31.75)
16	1.630 (41.4)	1.521/1.511 (38.63/38.38)	.901/.896 (22.9/22.8)	.780 (19.81)	1.062 (27.0)	.137/.097 (3.48/2.46)	1.125-20 UNEF-2A	1.062-18 UNEF-2A	1.096/1.090 (27.8/27.7)	1.105 (28.07)	1.135 (28.8)	1.329 (33.76)
18	1.740 (44.2)	1.646/1.636 (41.81/41.55)	1.007/1.002 (25.6/25.5)	.866 (22.00)	1.187 (30.1)	.137/.097 (3.48/2.46)	1.250-20 UNEF-2A	1.187-18 UNEF-2A	1.220/1.214 (31.0/30.8)	1.225 (31.12)	1.260 (32.0)	1.455 (36.96)
20	1.860 (47.2)	1.771/1.761 (44.98/44.73)	1.132/1.127 (28.8/28.6)	.991 (25.17)	1.312 (33.3)	.137/.097 (3.48/2.46)	1.375-18 UNEF-2A	1.312-18 UNEF-2A	1.345/1.339 (34.2/34.0)	1.350 (34.29)	1.385 (35.2)	1.642 (41.71)
22	2.040 (51.8)	1.959/1.949 (49.76/49.50)	1.257/1.252 (31.9/31.8)	1.116 (28.35)	1.437 (36.5)	.168/.128 (4.27/3.25)	1.500-18 UNEF-2A	1.437-18 UNEF-2A	1.470/1.464 (37.3/37.2)	1.475 (37.47)	1.510 (38.4)	1.705 (43.31)
24	2.160 (54.9)	2.084/2.074 (52.93/52.68)	1.382/1.377 (35.1/35.0)	1.241 (31.52)	1.562 (39.7)	.168/.128 (4.27/3.25)	1.625-18 UNEF-2A	1.562-18 UNEF-2A	1.595/1.589 (40.5/40.4)	1.600 (40.64)	1.635 (41.5)	1.892 (48.06)

TABLE II: Contacts

Con-tact Size	Contact Type	AA	ØØ BB	ØØ CC Min	DD	FF Max
12	Cup	--	.150 (3.8)	.112 (2.8)	--	.235 (6.0)
12	Eyelet	.035 (0.9)	--	--	.200 (5.1)	.235 (6.0)
16	Cup	--	.103 (2.6)	.069 (1.8)	--	.235 (6.0)
16	Eyelet	.025 (0.6)	--	--	.125 (3.2)	.235 (6.0)
20	Cup	--	.077 (2.0)	.042 (1.1)	--	.165 (4.2)
20	Eyelet	.015 (0.4)	--	--	.080 (2.0)	.165 (4.2)

APPLICATION NOTES

1. Assembly identified with manufacturer's name and part number, space permitting.
2. Glenair 230-040 will mate with any QPL MIL-DTL-MS26500/MS24266 type threaded coupling plug of same size, keyway and insert polarization.
3. Performance:
   Hermeticity - <x10^{-7} ccHe/sec @ 1 atmosphere differential
   Dielectric withstanding voltage - consult factory or MIL-STD-1554
   Insulation resistance - 5000 megohms min @ 500VDC
4. Material/ Finish:
   Shell and Jam Nut—specified by class
   Contacts—52 Nickel alloy/Gold plated
   Insulators—Glass/N.A.
   Seals—fluorosilicone elastomer/N.A.
5. Metric Dimensions (mm) are indicated in parentheses.

Dimensions in Inches (millimeters) are subject to change without notice.

© 2013 Glenair, Inc. U.S. CAGE Code 06324 Printed in U.S.A.