DATA SHEET

TDA8563AQ

2 × 40 W/2 Ω stereo BTL car radio power amplifier with diagnostic facility

Product specification
Supersedes data of 1997 Feb 20
File under Integrated Circuits, IC01

2001 Feb 21

Philips
Semiconductors

PHILIPS

2 × 40 W/2 Ω stereo BTL car radio power amplifier with diagnostic facility

TDA8563AQ

FEATURES

- Requires very few external components
- High output power
- 4 Ω and 2 Ω load impedance
- Low output offset voltage
- Fixed gain
- Diagnostic facility (distortion, short-circuit and temperature detection)
- Good ripple rejection
- Mode select switch (operating, mute and standby)
- Load dump protection
- Short-circuit safe to ground, to V_P and across the load
- Low power dissipation in any short-circuit condition
- Thermally protected
- Reverse polarity safe
- Electrostatic discharge protection
- No switch-on/switch-off plop
- Flexible leads
- Low thermal resistance.

GENERAL DESCRIPTION

The TDA8563AQ is an integrated class-B output amplifier in a 13-lead single-in-line (SIL) power package. It contains 2 × 40 W/2 Ω amplifiers in a BTL configuration.

The device is primarily developed for car radio applications.

QUICK REFERENCE DATA

SYMBOL	PARAMETER	CONDITIONS	MIN.	TYP.	MAX.	UNIT
V_P	operating supply voltage		6.0	14.4	18	V
I_{ORM}	repetitive peak output current		–	–	7.5	A
$I_{q(tot)}$	total quiescent current		–	115	–	mA
I_{stb}	standby current		–	0.1	10	μA
I_{sw}	switch-on current		–	–	40	μA
$\|Z_I\|$	input impedance		25	30	–	kΩ
P_o	output power	R_L = 4 Ω; THD = 10%	–	25	–	W
		R_L = 2 Ω; THD = 10%	–	40	–	W
SVRR	supply voltage ripple rejection	R_S = 0 Ω	–	60	–	dB
α_{cs}	channel separation	R_S = 10 kΩ	–	50	–	dB
G_v	closed loop voltage gain		25	26	27	dB
$V_{n(o)}$	noise output voltage	R_S = 0 Ω	–	–	120	μV

ORDERING INFORMATION

TYPE NUMBER	PACKAGE		
	NAME	DESCRIPTION	VERSION
TDA8563AQ	DBS13P	plastic DIL-bent-SIL power package; 13 leads (lead length 12 mm)	SOT141-6

BLOCK DIAGRAM

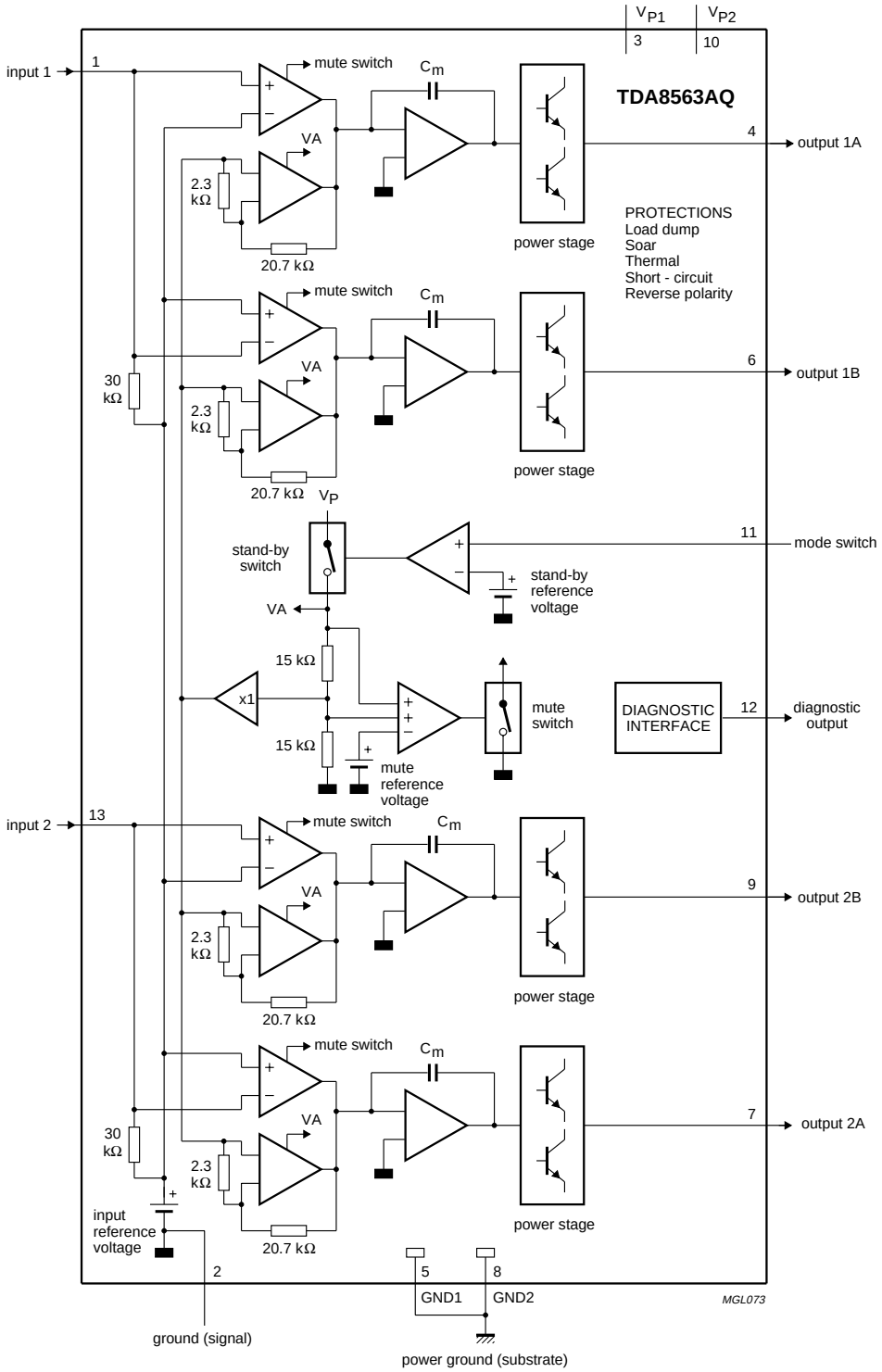

Fig.1 Block diagram.

PINNING

SYMBOL	PIN	DESCRIPTION
IN 1	1	input 1
GND(S)	2	signal ground
V_{P1}	3	supply voltage 1
OUT 1A	4	output 1A
GND1	5	power ground 1
OUT 1B	6	output 1B
OUT 2A	7	output 2A
GND2	8	power ground 2
OUT 2B	9	output 2B
V_{P2}	10	supply voltage 2
MODE	11	mode switch input
V_{DIAG}	12	diagnostic output
IN 2	13	input 2

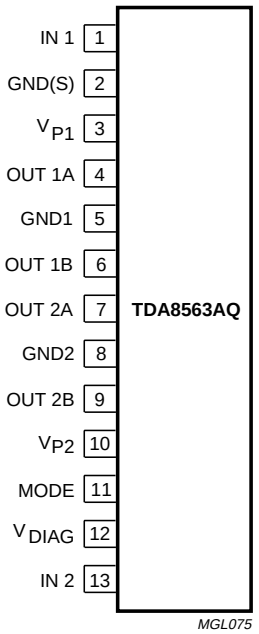

Fig.2 Pin configuration.

FUNCTIONAL DESCRIPTION

The TDA8563AQ contains two identical amplifiers and can be used for bridge applications. The gain of each amplifier is fixed at 26 dB. Special features of the device are as follows.

Mode select switch (pin 11)

- Standby: low supply current
- Mute: input signal suppressed
- Operating: normal on condition.

Since this pin has a very low input current (<40 μA), a low cost supply switch can be applied.

To avoid switch-on plops, it is advised to keep the amplifier in the mute mode during ≥100 ms (charging of the input capacitors at pin 1 and pin 13). During switching from standby to mute, the slope should be at least 18 V/s.

This can be achieved by:

- Microprocessor control
- External timing circuit (see Fig.7).

Diagnostic output (pin 12)

DYNAMIC DISTORTION DETECTOR (DDD)

At the onset of clipping of one or more output stages, the dynamic distortion detector becomes active and pin 12 goes LOW. This information can be used to drive a sound processor or DC volume control to attenuate the input signal and thus limit the distortion. The output level of pin 12 is independent of the number of channels that are clipping (see Fig.3).

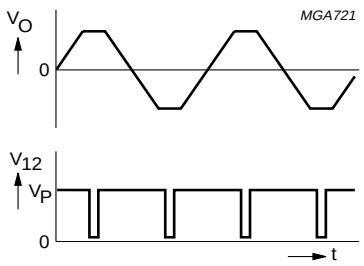

Fig.3 Distortion detector waveform.

SHORT-CIRCUIT PROTECTION

When a short-circuit occurs at one or more outputs to ground or to the supply voltage, the output stages are switched off until the short-circuit is removed and the device is switched on again, with a delay of approximately 20 ms, after removal of the short-circuit. During this short-circuit condition, pin 12 is continuously LOW.

When a short-circuit across the load of one or both channels occurs the output stages are switched off during approximately 20 ms. After that time it is checked during approximately 50 μs to see whether the short-circuit is still present. Due to this duty cycle of 50 μs/20 ms the average current consumption during this short-circuit condition is very low (approximately 40 mA).

During this short-circuit condition, pin 12 is LOW for 20 ms and HIGH for 50 μs (see Fig.4).

The power dissipation in any short-circuit condition is very low.

TEMPERATURE DETECTION

When the virtual junction temperature T_{vj} reaches 150 °C, pin 12 will become continuously low.

OPEN COLLECTOR OUTPUT

Pin 12 is an open collector output, which allows pin 12 of more devices being tied together.

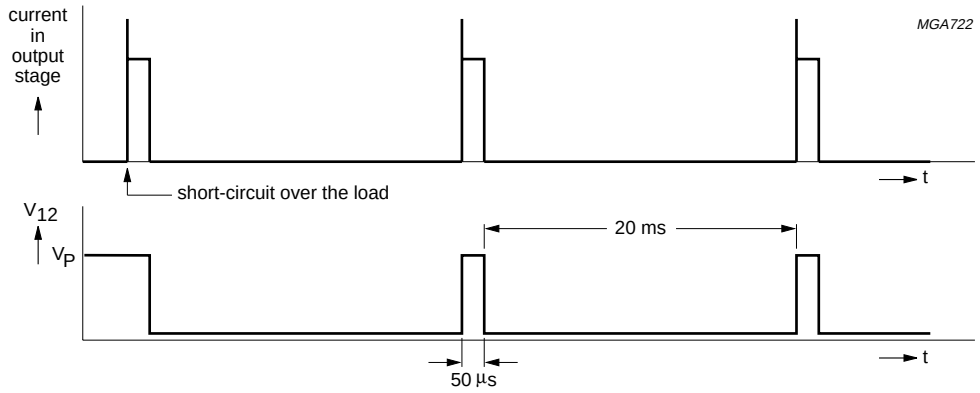

Fig.4 Short-circuit waveform.

LIMITING VALUES

In accordance with the Absolute Maximum Rating System (IEC 60134).

SYMBOL	PARAMETER	CONDITIONS	MIN.	MAX.	UNIT
V_P	supply voltage				
	operating		–	18	V
	non-operating		–	30	V
	load dump protection	during 50 ms; $t_r \geq 2.5$ ms	–	45	V
V_{psc}	AC and DC short-circuit safe voltage		–	18	V
V_{rp}	reverse polarity		–	6	V
I_{OSM}	non-repetitive peak output current		–	10	A
I_{ORM}	repetitive peak output current		–	7.5	A
P_{tot}	total power dissipation		–	60	W
T_{stg}	storage temperature		–55	+150	°C
T_{amb}	ambient temperature		–40	+85	°C
T_{vj}	virtual junction temperature		–	150	°C

THERMAL CHARACTERISTICS

SYMBOL	PARAMETER	VALUE	UNIT
$R_{th(j-a)}$	thermal resistance from junction to ambient in free air	40	K/W
$R_{th(j-c)}$	thermal resistance from junction to case (see Fig.5)	1.3	K/W

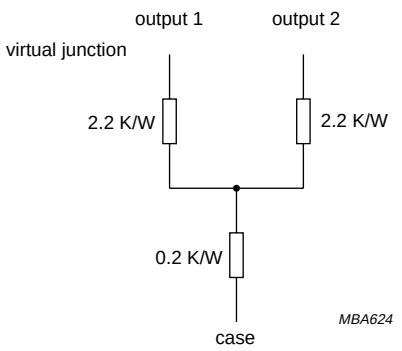

Fig.5 Equivalent thermal resistance network.

DC CHARACTERISTICS

V_P = 14.4 V; T_{amb} = 25 °C; measured in Fig.6; unless otherwise specified.

SYMBOL	PARAMETER	CONDITIONS	MIN.	TYP.	MAX.	UNIT
Supply						
V_P	supply voltage	note 1	6.0	14.4	18	V
I_q	quiescent current	$R_L = \infty$	–	115	180	mA
Operating condition						
V_{11}	mode switch voltage level		8.5	–	V_P	V
I_{11}	mode switch current	V_{11} = 14.4 V	–	15	40	μA
V_O	DC output voltage	note 2	–	7.0	–	V
V_{OO}	DC output offset voltage		–	–	100	mV
Mute condition						
V_{11}	mode switch voltage level		3.3	–	6.4	V
V_O	DC output voltage	note 2	–	7.0	–	V
V_{OO}	DC output offset voltage		–	–	60	mV
ΔV_{OO}	DELTA DC output offset voltage	mute/operating	–	–	60	mV
Standby condition						
V_{11}	mode switch voltage level		0	–	2	V
I_{stb}	standby current		–	0.1	10	μA
Diagnostic output						
V_{12}	diagnostic output voltage	any short-circuit or clipping	–	–	0.6	V

Notes

1. The circuit is DC adjusted at V_P = 6 to 18 V and AC operating at V_P = 8.5 to 18 V.
2. At 18 V < V_P < 30 V the DC output voltage $\leq \frac{1}{2}V_P$.

AC CHARACTERISTICS

V_P = 14.4 V; R_L = 2 Ω; f = 1 kHz; T_{amb} = 25 °C; measured in Fig.6; unless otherwise specified.

SYMBOL	PARAMETER	CONDITIONS	MIN.	TYP.	MAX.	UNIT
P_o	output power	THD = 0.5%	25	30	–	W
		THD = 10%	33	40	–	W
		THD = 30%	45	55	–	W
		THD = 0.5%; V_P = 13.2 V	–	25	–	W
		THD = 10%; V_P = 13.2 V	–	35	–	W
THD	total harmonic distortion	P_o = 1 W	–	0.1	–	%
		$V_{12} \leq$ 0.6 V; note 1	–	2.2	–	%
B	power bandwidth	THD = 0.5%; P_o = –1 dB with respect to 25 W	–	20 to 20000	–	Hz
$f_{ro(l)}$	low frequency roll-off	at –1 dB; note 2	–	25	–	Hz
$f_{ro(h)}$	high frequency roll-off	at –1 dB	20	–	–	kHz
G_v	closed loop voltage gain		25	26	27	dB
SVRR	supply voltage ripple rejection					
	on	note 3	50	–	–	dB
	mute	note 3	50	–	–	dB
	standby	note 3	80	–	–	dB
$\|Z_i\|$	input impedance		25	30	38	kΩ
$V_{n(o)}$	noise output voltage					
	on	note 4	–	85	120	μV
	on	note 5	–	100	–	μV
	mute	note 6	–	60	–	μV
α_{cs}	channel separation	note 7	45	–	–	dB
$\|\Delta G_v\|$	channel unbalance		–	–	1	dB
$V_{o(mute)}$	output voltage in mute	note 8	–	–	2	mV

Notes

1. Dynamic distortion detector active.
2. Frequency response externally fixed.
3. $V_{ripple} = V_{ripple(max)}$ = 2 V (p-p); R_s = 0 Ω.
4. B = 20 Hz to 20 kHz; R_s = 0 Ω.
5. B = 20 Hz to 20 kHz; R_s = 10 kΩ.
6. B = 20 Hz to 20 kHz; independent of R_s.
7. P_o = 25 W; R_s = 10 kΩ.
8. $V_i = V_{i(max)}$ = 1 V (RMS).

AC CHARACTERISTICS

V_P = 14.4 V; R_L = 4 Ω; f = 1 kHz; T_{amb} = 25 °C; measured in Fig.6; unless otherwise specified.

SYMBOL	PARAMETER	CONDITIONS	MIN.	TYP.	MAX.	UNIT
P_o	output power	THD = 0.5%	16	19	–	W
		THD = 10%	21	25	–	W
		THD = 30%	28	35	–	W
		THD = 0.5%; V_P = 13.2 V	–	15	–	W
		THD = 10%; V_P = 13.2 V	–	21	–	W
THD	total harmonic distortion	P_o = 1 W	–	0.1	–	%

TEST AND APPLICATION INFORMATION

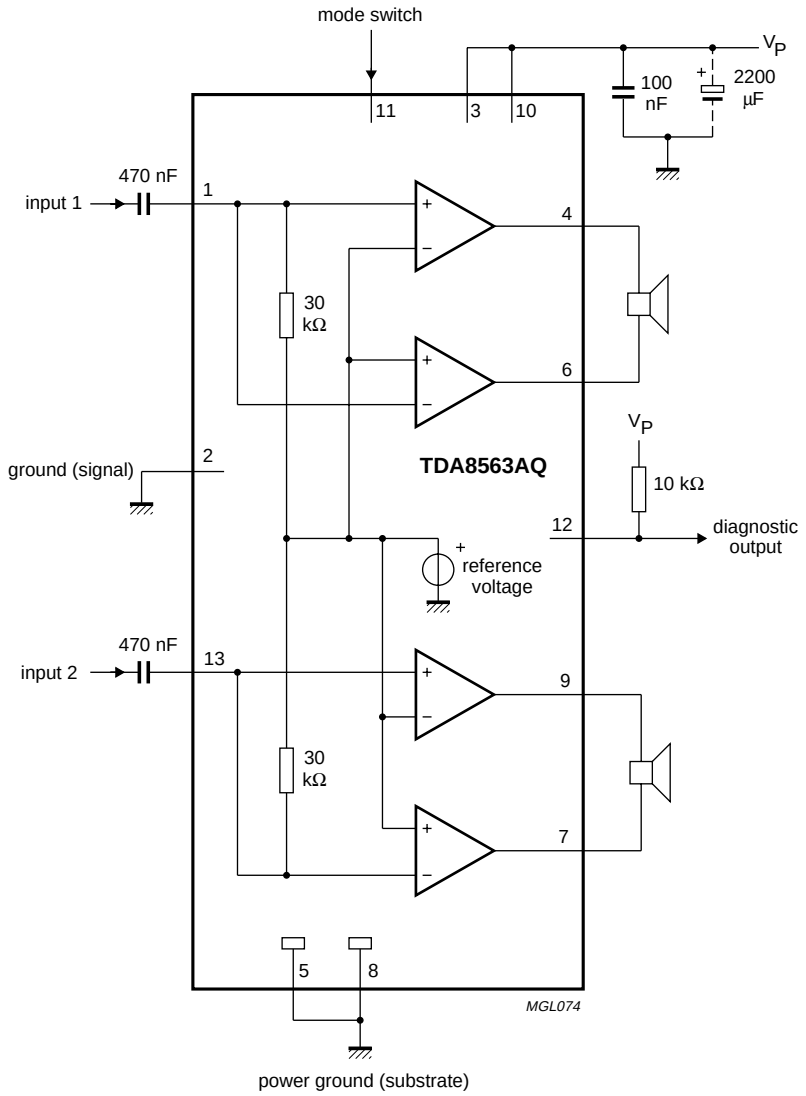

(1) To avoid high energy switching pulses which can feedback to the inputs it is advisable to ensure that the value of the resistor at pin 12 is ≥10 kΩ.

Fig.6 Stereo BTL test/application diagram.

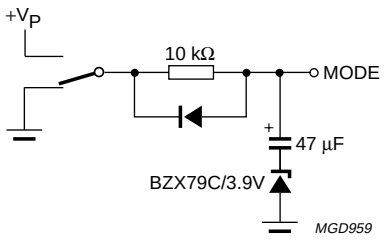

Fig.7 Mode select switch circuitry.

Diagnostic output

Special care must be taken in the printed-circuit board layout to separate pin 12 from pin 1 and pin 13, to minimize the crosstalk between the diagnostic output and the inputs.

Mode select switch

To avoid switch-on plops, it is advised to keep the amplifier in the mute mode during >100 ms (charging of the input capacitors at pin 1 and pin 13).

The circuit in Fig.7 slowly ramps up the voltage at the mode select switch pin when switching on and results in fast muting when switching off.

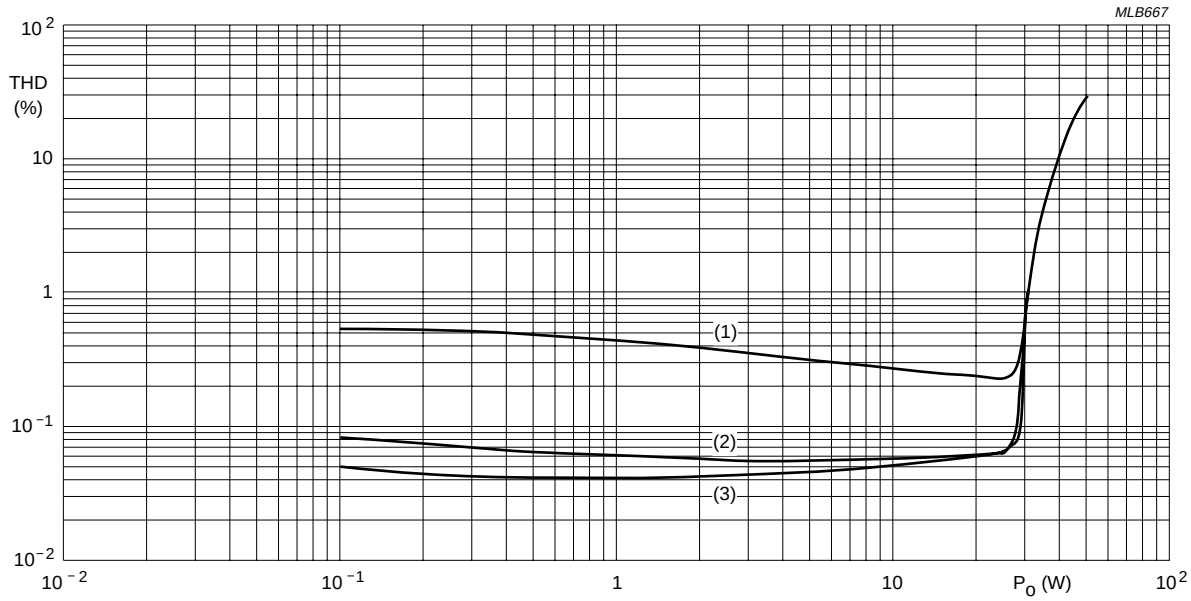

(1) f = 10 kHz.
(2) f = 1 Hz.
(3) f = 100 Hz.

Fig.8 Total harmonic distortion as a function of output power; V_P = 14.4 V; R_L = 2 Ω.

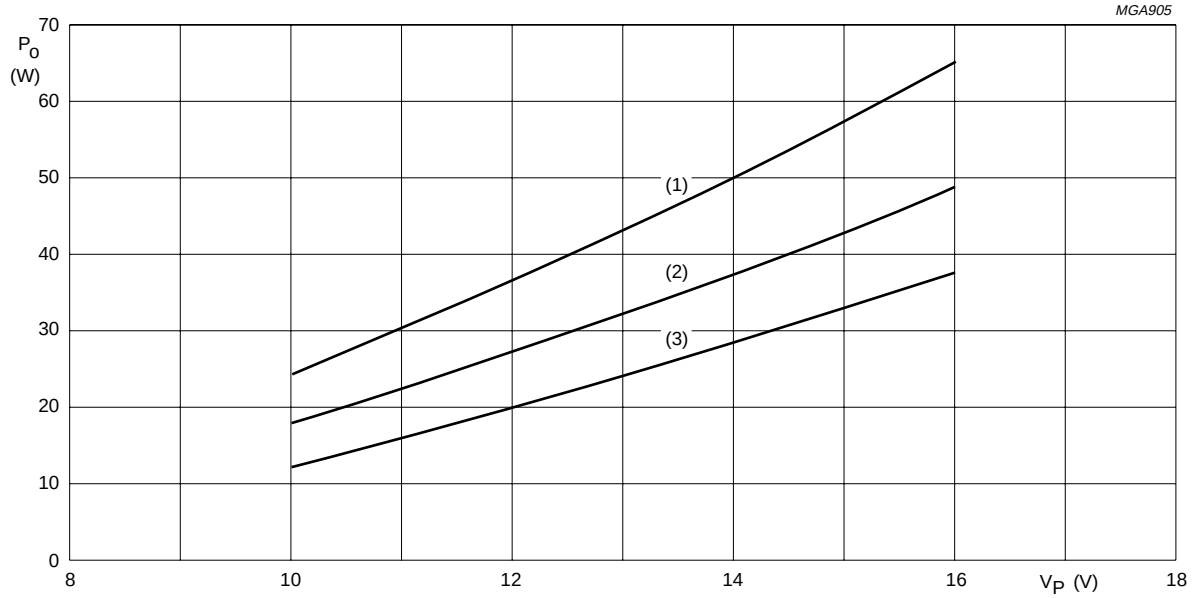

(1) THD = 30%.
(2) THD = 10%.
(3) THD = 0.5%.

Fig.9 Output power as a function of supply voltage; f = 1 kHz; R_L = 2 Ω.

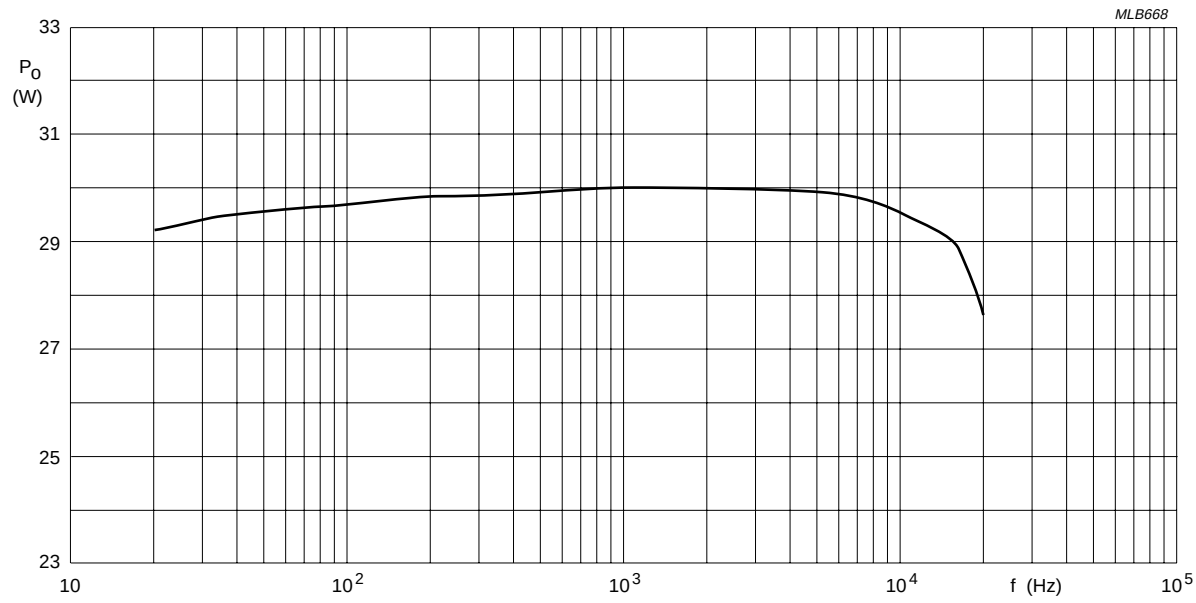

Fig.10 Output power as a function of frequency; THD = 0.5%; V_P = 14.4 V; R_L = 2 Ω.

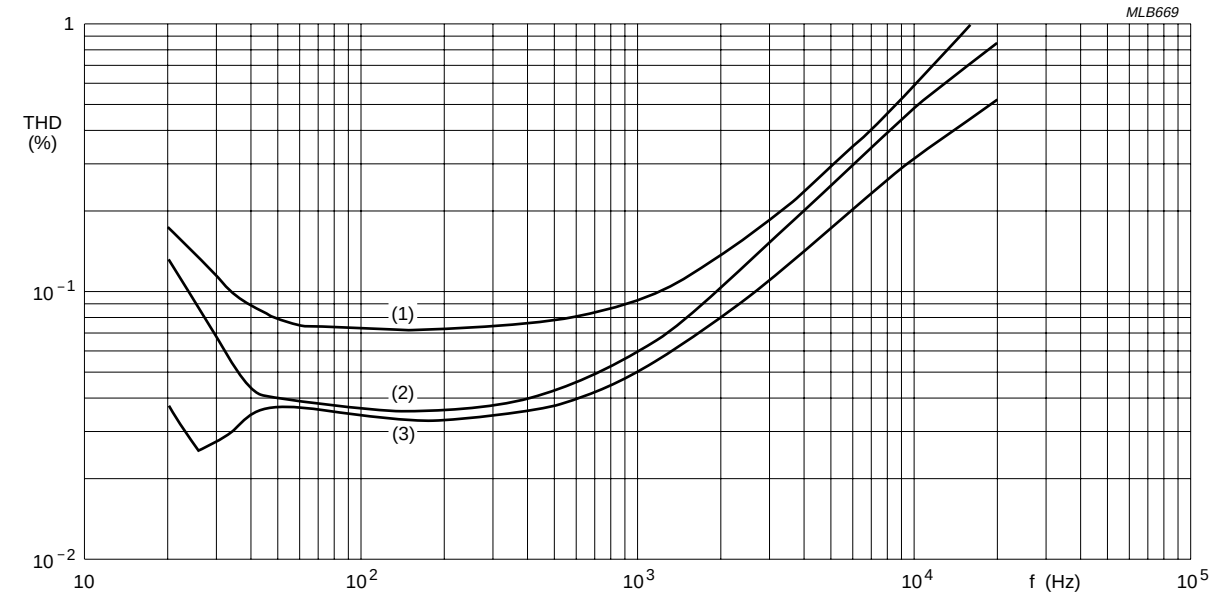

(1) P_o = 0.1 W.
(2) P_o = 1 W.
(3) P_o = 10 W.

Fig.11 Total harmonic distortion as a function of frequency; V_P = 14.4 V; R_L = 2 Ω.

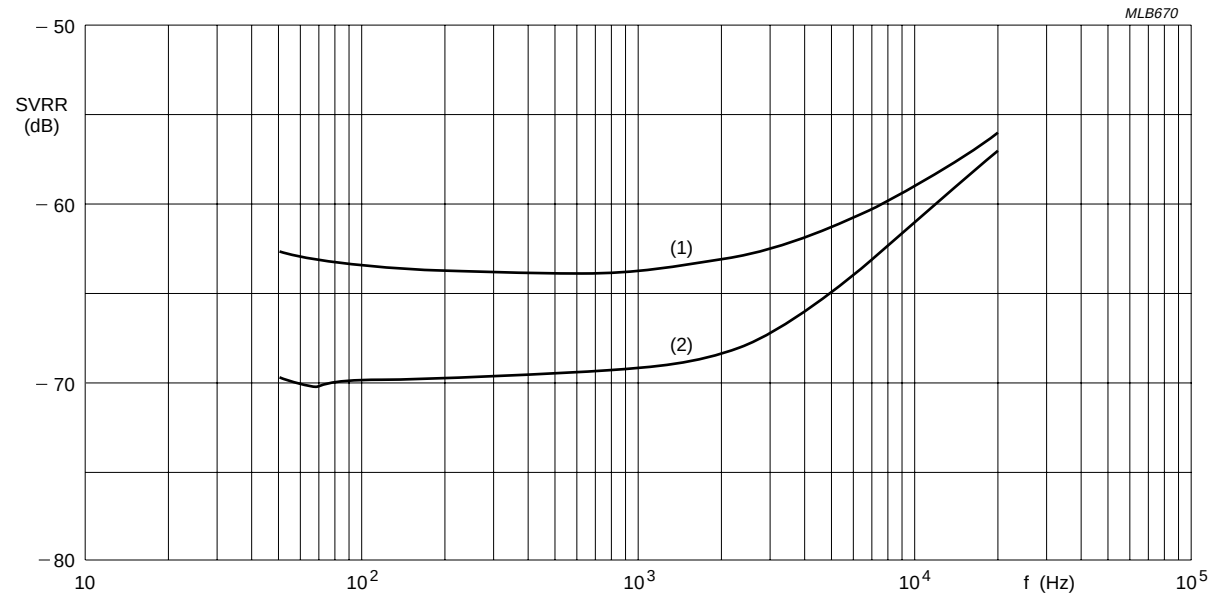

(1) On condition.
(2) Mute condition.

Fig.12 Ripple rejection as a function of frequency; V_P = 14.4 V; V_{ripple} = 2 V (p-p); R_s = 0 Ω.

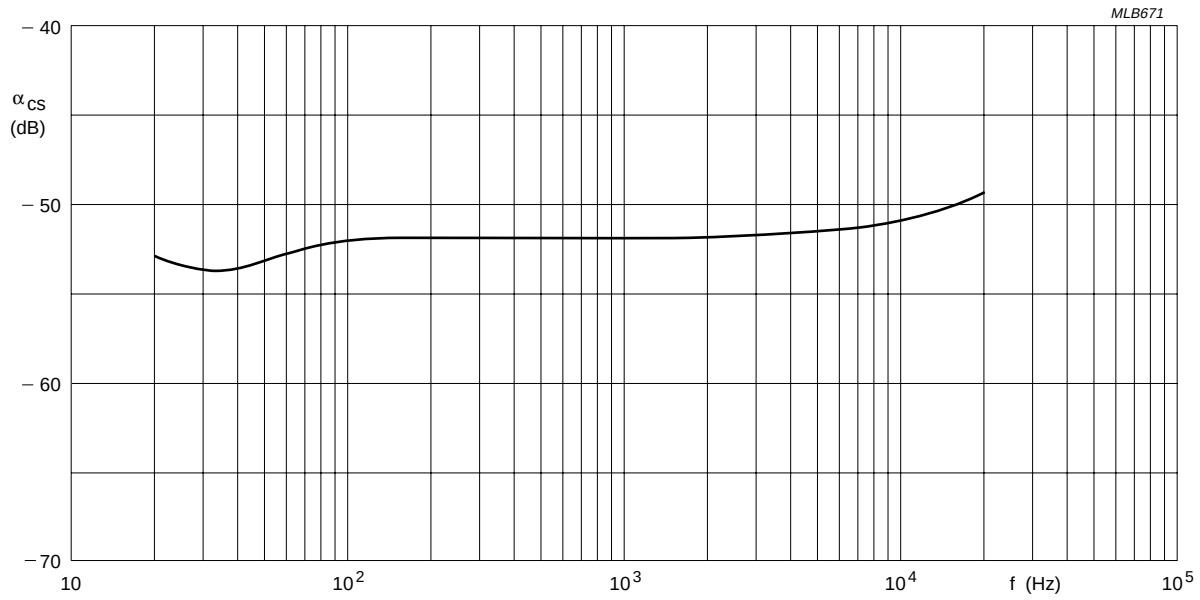

Fig.13 Channel separation as a function of frequency; V_P = 14.4 V; P_o = 25 W; R_L = 2 Ω; R_s = 10 kΩ.

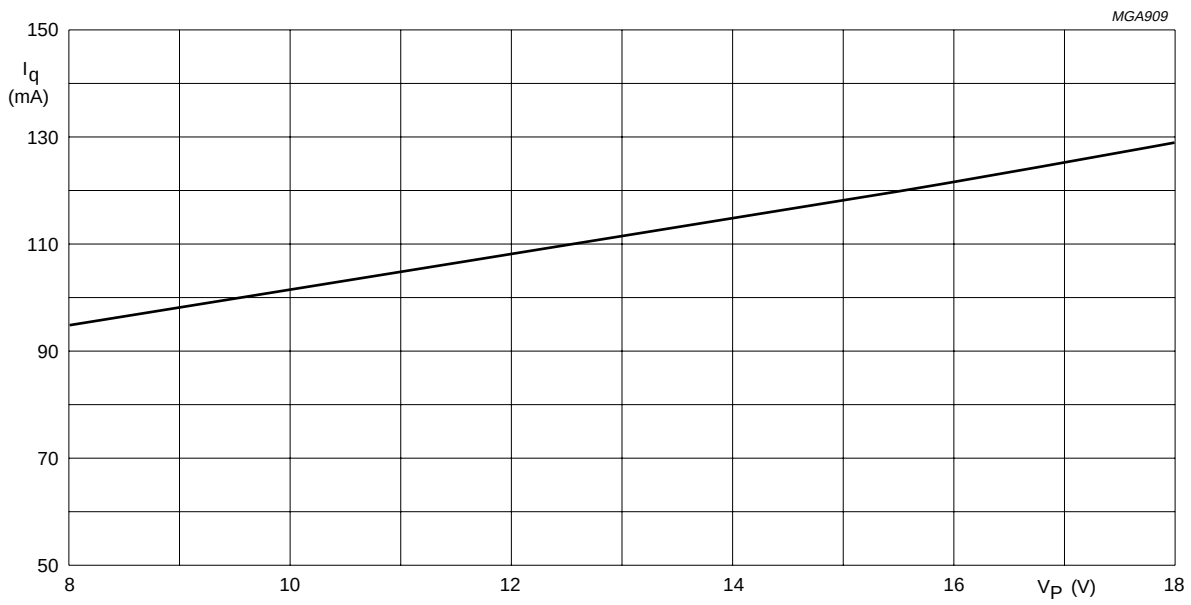

Fig.14 Quiescent current as a function of supply voltage; R_L = ∞.

PACKAGE OUTLINE

DBS13P: plastic DIL-bent-SIL power package; 13 leads (lead length 12 mm) **SOT141-6**

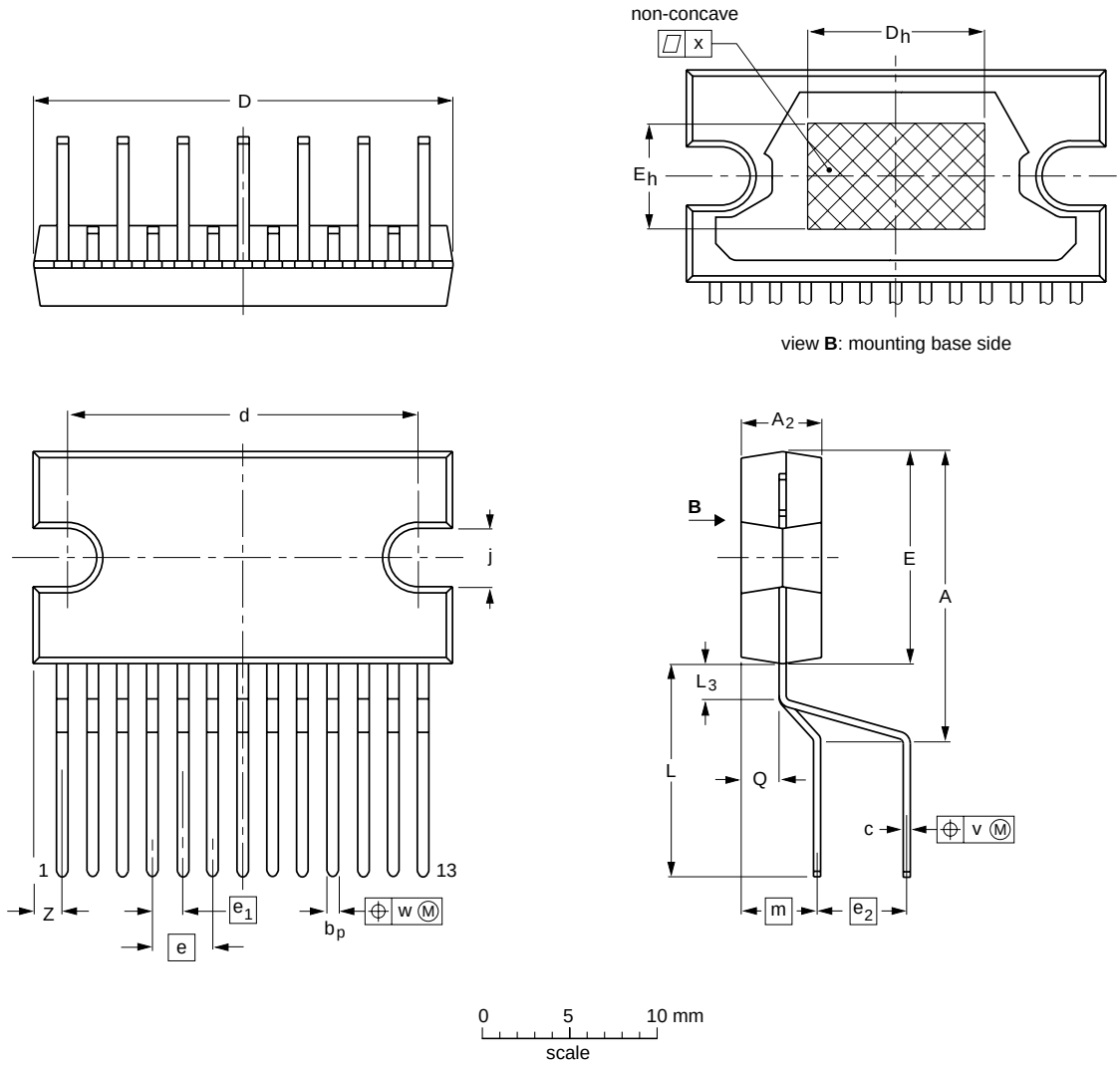

DIMENSIONS (mm are the original dimensions)

UNIT	A	A_2	b_p	c	D(1)	d	D_h	E(1)	e	e_1	e_2	E_h	j	L	L_3	m	Q	v	w	x	Z(1)
mm	17.0 15.5	4.6 4.4	0.75 0.60	0.48 0.38	24.0 23.6	20.0 19.6	10	12.2 11.8	3.4	1.7	5.08	6	3.4 3.1	12.4 11.0	2.4 1.6	4.3	2.1 1.8	0.8	0.25	0.03	2.00 1.45

Note

1. Plastic or metal protrusions of 0.25 mm maximum per side are not included.

OUTLINE VERSION	REFERENCES				EUROPEAN PROJECTION	ISSUE DATE
	IEC	JEDEC	EIAJ			
SOT141-6						~~97-12-16~~ 99-12-17

SOLDERING

Introduction to soldering through-hole mount packages

This text gives a brief insight to wave, dip and manual soldering. A more in-depth account of soldering ICs can be found in our *"Data Handbook IC26; Integrated Circuit Packages"* (document order number 9398 652 90011).

Wave soldering is the preferred method for mounting of through-hole mount IC packages on a printed-circuit board.

Soldering by dipping or by solder wave

The maximum permissible temperature of the solder is 260 °C; solder at this temperature must not be in contact with the joints for more than 5 seconds.

The total contact time of successive solder waves must not exceed 5 seconds.

The device may be mounted up to the seating plane, but the temperature of the plastic body must not exceed the specified maximum storage temperature ($T_{stg(max)}$). If the printed-circuit board has been pre-heated, forced cooling may be necessary immediately after soldering to keep the temperature within the permissible limit.

Manual soldering

Apply the soldering iron (24 V or less) to the lead(s) of the package, either below the seating plane or not more than 2 mm above it. If the temperature of the soldering iron bit is less than 300 °C it may remain in contact for up to 10 seconds. If the bit temperature is between 300 and 400 °C, contact may be up to 5 seconds.

Suitability of through-hole mount IC packages for dipping and wave soldering methods

PACKAGE	SOLDERING METHOD	
	DIPPING	WAVE
DBS, DIP, HDIP, SDIP, SIL	suitable	suitable[1]

Note

1. For SDIP packages, the longitudinal axis must be parallel to the transport direction of the printed-circuit board.

DATA SHEET STATUS

DATA SHEET STATUS	PRODUCT STATUS	DEFINITIONS [1]
Objective specification	Development	This data sheet contains the design target or goal specifications for product development. Specification may change in any manner without notice.
Preliminary specification	Qualification	This data sheet contains preliminary data, and supplementary data will be published at a later date. Philips Semiconductors reserves the right to make changes at any time without notice in order to improve design and supply the best possible product.
Product specification	Production	This data sheet contains final specifications. Philips Semiconductors reserves the right to make changes at any time without notice in order to improve design and supply the best possible product.

Note

1. Please consult the most recently issued data sheet before initiating or completing a design.

DEFINITIONS

Short-form specification — The data in a short-form specification is extracted from a full data sheet with the same type number and title. For detailed information see the relevant data sheet or data handbook.

Limiting values definition — Limiting values given are in accordance with the Absolute Maximum Rating System (IEC 60134). Stress above one or more of the limiting values may cause permanent damage to the device. These are stress ratings only and operation of the device at these or at any other conditions above those given in the Characteristics sections of the specification is not implied. Exposure to limiting values for extended periods may affect device reliability.

Application information — Applications that are described herein for any of these products are for illustrative purposes only. Philips Semiconductors make no representation or warranty that such applications will be suitable for the specified use without further testing or modification.

DISCLAIMERS

Life support applications — These products are not designed for use in life support appliances, devices, or systems where malfunction of these products can reasonably be expected to result in personal injury. Philips Semiconductors customers using or selling these products for use in such applications do so at their own risk and agree to fully indemnify Philips Semiconductors for any damages resulting from such application.

Right to make changes — Philips Semiconductors reserves the right to make changes, without notice, in the products, including circuits, standard cells, and/or software, described or contained herein in order to improve design and/or performance. Philips Semiconductors assumes no responsibility or liability for the use of any of these products, conveys no licence or title under any patent, copyright, or mask work right to these products, and makes no representations or warranties that these products are free from patent, copyright, or mask work right infringement, unless otherwise specified.

NOTES

NOTES

Philips Semiconductors – a worldwide company

Argentina: see South America

Australia: 3 Figtree Drive, HOMEBUSH, NSW 2140,
Tel. +61 2 9704 8141, Fax. +61 2 9704 8139

Austria: Computerstr. 6, A-1101 WIEN, P.O. Box 213,
Tel. +43 1 60 101 1248, Fax. +43 1 60 101 1210

Belarus: Hotel Minsk Business Center, Bld. 3, r. 1211, Volodarski Str. 6,
220050 MINSK, Tel. +375 172 20 0733, Fax. +375 172 20 0773

Belgium: see The Netherlands

Brazil: see South America

Bulgaria: Philips Bulgaria Ltd., Energoproject, 15th floor,
51 James Bourchier Blvd., 1407 SOFIA,
Tel. +359 2 68 9211, Fax. +359 2 68 9102

Canada: PHILIPS SEMICONDUCTORS/COMPONENTS,
Tel. +1 800 234 7381, Fax. +1 800 943 0087

China/Hong Kong: 501 Hong Kong Industrial Technology Centre,
72 Tat Chee Avenue, Kowloon Tong, HONG KONG,
Tel. +852 2319 7888, Fax. +852 2319 7700

Colombia: see South America

Czech Republic: see Austria

Denmark: Sydhavnsgade 23, 1780 COPENHAGEN V,
Tel. +45 33 29 3333, Fax. +45 33 29 3905

Finland: Sinikalliontie 3, FIN-02630 ESPOO,
Tel. +358 9 615 800, Fax. +358 9 6158 0920

France: 51 Rue Carnot, BP317, 92156 SURESNES Cedex,
Tel. +33 1 4099 6161, Fax. +33 1 4099 6427

Germany: Hammerbrookstraße 69, D-20097 HAMBURG,
Tel. +49 40 2353 60, Fax. +49 40 2353 6300

Hungary: Philips Hungary Ltd., H-1119 Budapest, Fehervari ut 84/A,
Tel: +36 1 382 1700, Fax: +36 1 382 1800

India: Philips INDIA Ltd, Band Box Building, 2nd floor,
254-D, Dr. Annie Besant Road, Worli, MUMBAI 400 025,
Tel. +91 22 493 8541, Fax. +91 22 493 0966

Indonesia: PT Philips Development Corporation, Semiconductors Division,
Gedung Philips, Jl. Buncit Raya Kav.99-100, JAKARTA 12510,
Tel. +62 21 794 0040 ext. 2501, Fax. +62 21 794 0080

Ireland: Newstead, Clonskeagh, DUBLIN 14,
Tel. +353 1 7640 000, Fax. +353 1 7640 200

Israel: RAPAC Electronics, 7 Kehilat Saloniki St, PO Box 18053,
TEL AVIV 61180, Tel. +972 3 645 0444, Fax. +972 3 649 1007

Italy: PHILIPS SEMICONDUCTORS, Via Casati, 23 - 20052 MONZA (MI),
Tel. +39 039 203 6838, Fax +39 039 203 6800

Japan: Philips Bldg 13-37, Kohnan 2-chome, Minato-ku,
TOKYO 108-8507, Tel. +81 3 3740 5130, Fax. +81 3 3740 5057

Korea: Philips House, 260-199 Itaewon-dong, Yongsan-ku, SEOUL,
Tel. +82 2 709 1412, Fax. +82 2 709 1415

Malaysia: No. 76 Jalan Universiti, 46200 PETALING JAYA, SELANGOR,
Tel. +60 3 750 5214, Fax. +60 3 757 4880

Mexico: 5900 Gateway East, Suite 200, EL PASO, TEXAS 79905,
Tel. +9-5 800 234 7381, Fax +9-5 800 943 0087

Middle East: see Italy

Netherlands: Postbus 90050, 5600 PB EINDHOVEN, Bldg. VB,
Tel. +31 40 27 82785, Fax. +31 40 27 88399

New Zealand: 2 Wagener Place, C.P.O. Box 1041, AUCKLAND,
Tel. +64 9 849 4160, Fax. +64 9 849 7811

Norway: Box 1, Manglerud 0612, OSLO,
Tel. +47 22 74 8000, Fax. +47 22 74 8341

Pakistan: see Singapore

Philippines: Philips Semiconductors Philippines Inc.,
106 Valero St. Salcedo Village, P.O. Box 2108 MCC, MAKATI,
Metro MANILA, Tel. +63 2 816 6380, Fax. +63 2 817 3474

Poland: Al.Jerozolimskie 195 B, 02-222 WARSAW,
Tel. +48 22 5710 000, Fax. +48 22 5710 001

Portugal: see Spain

Romania: see Italy

Russia: Philips Russia, Ul. Usatcheva 35A, 119048 MOSCOW,
Tel. +7 095 755 6918, Fax. +7 095 755 6919

Singapore: Lorong 1, Toa Payoh, SINGAPORE 319762,
Tel. +65 350 2538, Fax. +65 251 6500

Slovakia: see Austria

Slovenia: see Italy

South Africa: S.A. PHILIPS Pty Ltd., 195-215 Main Road Martindale,
2092 JOHANNESBURG, P.O. Box 58088 Newville 2114,
Tel. +27 11 471 5401, Fax. +27 11 471 5398

South America: Al. Vicente Pinzon, 173, 6th floor,
04547-130 SÃO PAULO, SP, Brazil,
Tel. +55 11 821 2333, Fax. +55 11 821 2382

Spain: Balmes 22, 08007 BARCELONA,
Tel. +34 93 301 6312, Fax. +34 93 301 4107

Sweden: Kottbygatan 7, Akalla, S-16485 STOCKHOLM,
Tel. +46 8 5985 2000, Fax. +46 8 5985 2745

Switzerland: Allmendstrasse 140, CH-8027 ZÜRICH,
Tel. +41 1 488 2741 Fax. +41 1 488 3263

Taiwan: Philips Semiconductors, 5F, No. 96, Chien Kuo N. Rd., Sec. 1,
TAIPEI, Taiwan Tel. +886 2 2134 2451, Fax. +886 2 2134 2874

Thailand: PHILIPS ELECTRONICS (THAILAND) Ltd.,
60/14 MOO 11, Bangna Trad Road KM. 3, Bagna, BANGKOK 10260,
Tel. +66 2 361 7910, Fax. +66 2 398 3447

Turkey: Yukari Dudullu, Org. San. Blg., 2.Cad. Nr. 28 81260 Umraniye,
ISTANBUL, Tel. +90 216 522 1500, Fax. +90 216 522 1813

Ukraine: PHILIPS UKRAINE, 4 Patrice Lumumba str., Building B, Floor 7,
252042 KIEV, Tel. +380 44 264 2776, Fax. +380 44 268 0461

United Kingdom: Philips Semiconductors Ltd., 276 Bath Road, Hayes,
MIDDLESEX UB3 5BX, Tel. +44 208 730 5000, Fax. +44 208 754 8421

United States: 811 East Arques Avenue, SUNNYVALE, CA 94088-3409,
Tel. +1 800 234 7381, Fax. +1 800 943 0087

Uruguay: see South America

Vietnam: see Singapore

Yugoslavia: PHILIPS, Trg N. Pasica 5/v, 11000 BEOGRAD,
Tel. +381 11 3341 299, Fax.+381 11 3342 553

For all other countries apply to: Philips Semiconductors,
Marketing Communications, Building BE-p, P.O. Box 218, 5600 MD EINDHOVEN,
The Netherlands, Fax. +31 40 27 24825

Internet: http://www.semiconductors.philips.com

© Philips Electronics N.V. 2001

SCA 71

All rights are reserved. Reproduction in whole or in part is prohibited without the prior written consent of the copyright owner.

The information presented in this document does not form part of any quotation or contract, is believed to be accurate and reliable and may be changed without notice. No liability will be accepted by the publisher for any consequence of its use. Publication thereof does not convey nor imply any license under patent- or other industrial or intellectual property rights.

Printed in The Netherlands 753503/02/pp20 Date of release: 2001 Feb 21 Document order number: 9397 750 07884

Let's make things better.

Philips Semiconductors

PHILIPS