TDA8920B

2 × 100 W class-D power amplifier

Rev. 02 — 07 November 2005 Product data sheet

1. General description

The TDA8920B is a high efficiency class-D audio power amplifier with very low dissipation. The typical output power is 2 × 100 W.

The device is available in the HSOP24 power package and in the DBS23P through-hole power package. The amplifier operates over a wide supply voltage range from ±12.5 V to ±30 V (±32 V non operating) and consumes a very low quiescent current.

2. Features

- Zero dead time switching
- Advanced current protection: output current limiting
- Smooth start-up: no pop noise due to DC offset
- High efficiency
- Operating supply voltage from ±12.5 V to ±30 V
- Low quiescent current
- Usable as a stereo Single-Ended (SE) amplifier or as a mono amplifier in Bridge-Tied Load (BTL)
- Fixed gain of 30 dB in Single-Ended (SE) and 36 dB in Bridge-Tied Load (BTL)
- High output power
- High supply voltage ripple rejection
- Internal switching frequency can be overruled by an external clock
- Full short-circuit proof across load and to supply lines
- Thermally protected

3. Applications

- Television sets
- Home-sound sets
- Multimedia systems
- All mains fed audio systems
- Car audio (boosters)

PHILIPS

4. Quick reference data

Table 1: Quick reference data

Symbol	Parameter	Conditions	Min	Typ	Max	Unit
General; V_P = ±27 V						
V_P	supply voltage		±12.5	±27	±30	V
$I_{q(tot)}$	total quiescent supply current	no load; no filter; no RC-snubber network connected	-	50	65	mA
Stereo single-ended configuration						
P_o	output power	R_L = 3 Ω; THD = 10 %; V_P = ±27 V	-	110	-	W
		R_L = 4 Ω; THD = 10 %; V_P = ±27 V	-	86	-	W
Mono bridge-tied load configuration						
P_o	output power	R_L = 6 Ω; THD = 10 %; V_P = ±27 V	-	210	-	W

5. Ordering information

Table 2: Ordering information

Type number	Package		
	Name	Description	Version
TDA8920BTH	HSOP24	plastic, heatsink small outline package; 24 leads; low stand-off height	SOT566-3
TDA8920BJ	DBS23P	plastic DIL-bent-SIL power package; 23 leads (straight lead length 3.2 mm)	SOT411-1

© Koninklijke Philips Electronics N.V. 2005. All rights reserved.

6. Block diagram

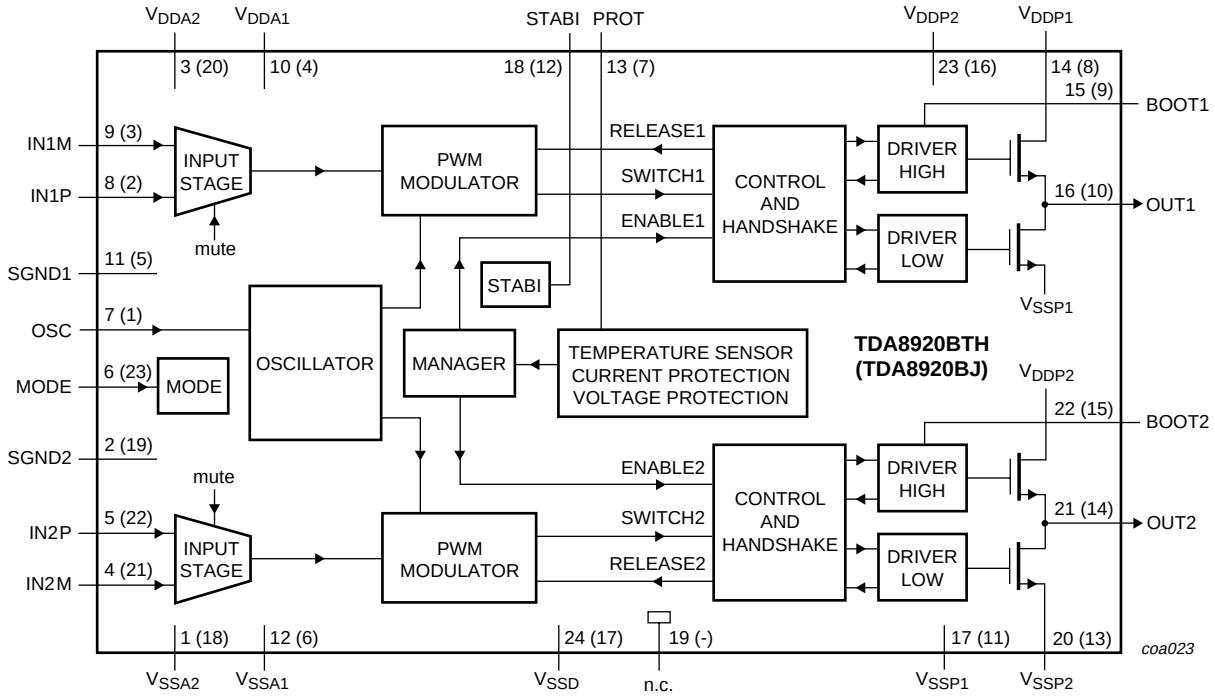

Pin numbers in parenthesis refer to the TDA8920BJ.

Fig 1. Block diagram

© Koninklijke Philips Electronics N.V. 2005. All rights reserved.

7. Pinning information

7.1 Pinning

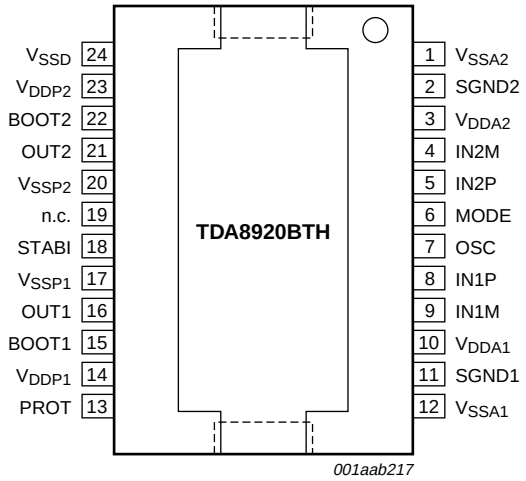

Fig 2. Pin configuration TDA8920BTH

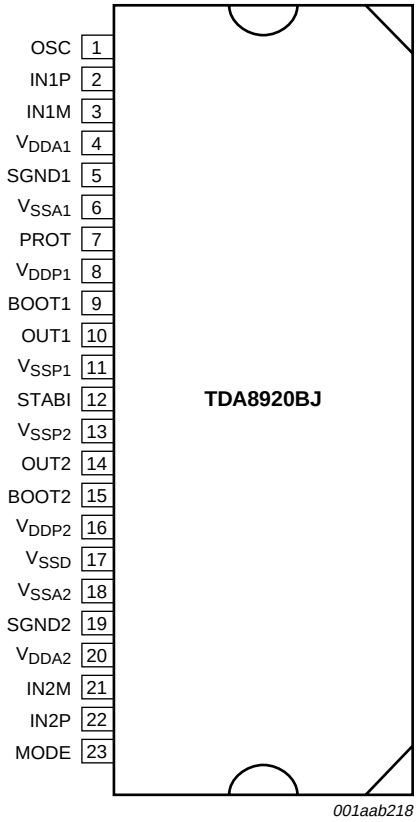

Fig 3. Pin configuration TDA8920BJ

7.2 Pin description

Table 3: Pin description

Symbol	Pin		Description
	TDA8920BTH	TDA8920BJ	
V_{SSA2}	1	18	negative analog supply voltage for channel 2
SGND2	2	19	signal ground for channel 2
V_{DDA2}	3	20	positive analog supply voltage for channel 2
IN2M	4	21	negative audio input for channel 2
IN2P	5	22	positive audio input for channel 2
MODE	6	23	mode selection input: Standby, Mute or Operating mode
OSC	7	1	oscillator frequency adjustment or tracking input
IN1P	8	2	positive audio input for channel 1
IN1M	9	3	negative audio input for channel 1
V_{DDA1}	10	4	positive analog supply voltage for channel 1

© Koninklijke Philips Electronics N.V. 2005. All rights reserved.

Table 3: Pin description *...continued*

Symbol	Pin		Description
	TDA8920BTH	TDA8920BJ	
SGND1	11	5	signal ground for channel 1
V_{SSA1}	12	6	negative analog supply voltage for channel 1
PROT	13	7	decoupling capacitor for protection (OCP)
V_{DDP1}	14	8	positive power supply voltage for channel 1
BOOT1	15	9	bootstrap capacitor for channel 1
OUT1	16	10	PWM output from channel 1
V_{SSP1}	17	11	negative power supply voltage for channel 1
STABI	18	12	decoupling of internal stabilizer for logic supply
n.c.	19	-	not connected
V_{SSP2}	20	13	negative power supply voltage for channel 2
OUT2	21	14	PWM output from channel 2
BOOT2	22	15	bootstrap capacitor for channel 2
V_{DDP2}	23	16	positive power supply voltage for channel 2
V_{SSD}	24	17	negative digital supply voltage

8. Functional description

8.1 General

The TDA8920B is a two channel audio power amplifier using class-D technology.

The audio input signal is converted into a digital pulse width modulated signal via an analog input stage and Pulse Width Modulation (PWM) modulator. To enable the output power transistors to be driven, this digital PWM signal is applied to a control and handshake block and driver circuits for both the high side and low side. In this way a level shift is performed from the low power digital PWM signal (at logic levels) to a high power PWM signal which switches between the main supply lines.

A 2nd-order low-pass filter converts the PWM signal to an analog audio signal across the loudspeakers.

The TDA8920B one-chip class-D amplifier contains high power D-MOS switches, drivers, timing and handshaking between the power switches and some control logic. For protection a temperature sensor and a maximum current detector are built-in.

The two audio channels of the TDA8920B contain two PWM modulators, two analog feedback loops and two differential input stages. It also contains circuits common to both channels such as the oscillator, all reference sources, the mode functionality and a digital timing manager.

The TDA8920B contains two independent amplifier channels with high output power, high efficiency, low distortion and a low quiescent current. The amplifier channels can be connected in the following configurations:

- Mono Bridge-Tied Load (BTL) amplifier
- Stereo Single-Ended (SE) amplifiers

© Koninklijke Philips Electronics N.V. 2005. All rights reserved.

The amplifier system can be switched to one of three operating modes by pin MODE:

- Standby mode; with a very low supply current
- Mute mode; the amplifiers are operational; but the audio signal at the output is suppressed by disabling the VI-converter input stages
- Operating mode; the amplifiers are fully operational with output signal

To ensure pop noise-free start-up, the DC output offset voltage is applied gradually to the output at a level between Mute mode and Operating mode levels. The bias current setting of the VI converters is related to the voltage on the MODE pin; in Mute mode the bias current setting of the VI converters is zero (VI converters disabled) and in Operating mode the bias current is at maximum. The time constant required to apply the DC output offset voltage gradually between Mute and Operating mode levels can be generated via an RC-network on the MODE pin. An example of a switching circuit for driving pin MODE is illustrated in Figure 4. If the capacitor C is left out of the application the voltage on the MODE pin will be applied with a much smaller time-constant, which might result in audible pop noises during start-up (depending on DC output offset voltage and loudspeaker used).

In order to fully charge the coupling capacitors at the inputs, the amplifier will remain automatically in the Mute mode before switching to the Operating mode. A complete overview of the start-up timing is given in Figure 5.

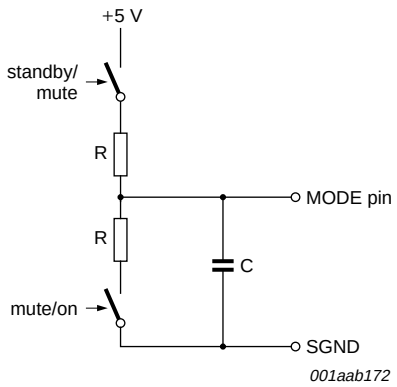

Fig 4. Example of mode selection circuit

© Koninklijke Philips Electronics N.V. 2005. All rights reserved.

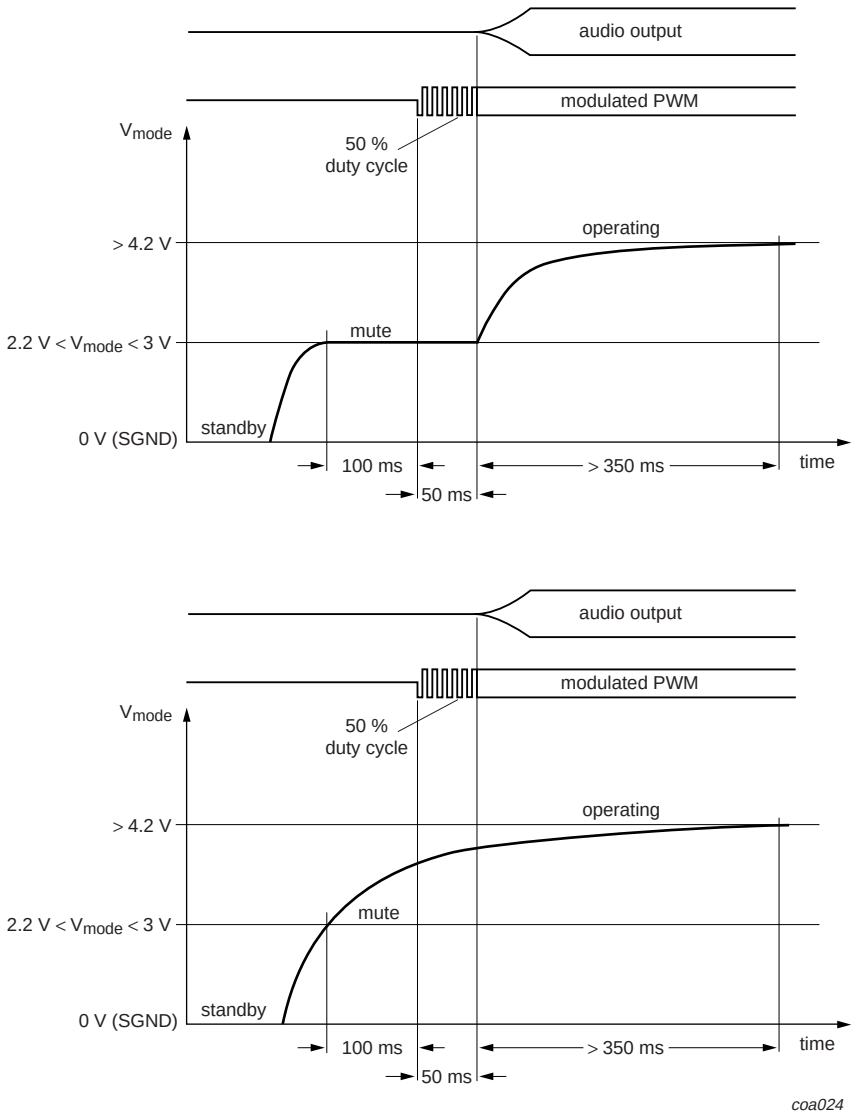

Upper diagram: When switching from standby to mute, there is a delay of 100 ms before the output starts switching. The audio signal is available after V_{mode} has been set to operating, but not earlier than 150 ms after switching to mute. For pop noise-free start-up it is recommended that the time constant applied to the MODE pin is at least 350 ms for the transition between mute and operating.

Lower diagram: When switching directly from standby to operating, there is a first delay of 100 ms before the outputs starts switching. The audio signal is available after a second delay of 50 ms. For pop noise-free start-up it is recommended that the time constant applied to the MODE pin is at least 500 ms for the transition between standby and operating.

Fig 5. Timing on mode selection input

© Koninklijke Philips Electronics N.V. 2005. All rights reserved.

8.2 Pulse width modulation frequency

The output signal of the amplifier is a PWM signal with a carrier frequency of approximately 317 kHz. Using a 2nd-order LC demodulation filter in the application results in an analog audio signal across the loudspeaker. This switching frequency is fixed by an external resistor R_{OSC} connected between pin OSC and V_{SSA}. An optimal setting for the carrier frequency is between 300 kHz and 350 kHz.

Using an external resistor of 30 kΩ on the OSC pin, the carrier frequency is set to 317 kHz.

If two or more class-D amplifiers are used in the same audio application, it is advisable to have all devices operating at the same switching frequency by using an external clock circuit.

8.3 Protections

The following protections are included in TDA8920B:

- OverTemperature Protection (OTP)
- OverCurrent Protection (OCP)
- Window Protection (WP)
- Supply voltage protections:
  - UnderVoltage Protection (UVP)
  - OverVoltage Protection (OVP)
  - UnBalance Protection (UBP)

The reaction of the device to the different fault conditions differs per protection.

8.3.1 OverTemperature Protection (OTP)

If the junction temperature T_j > 150 °C, then the power stage will shut-down immediately. The power stage will start switching again if the temperature drops to approximately 130 °C, thus there is a hysteresis of approximately 20 °C.

8.3.2 OverCurrent Protection (OCP)

When the loudspeaker terminals are short-circuited or if one of the demodulated outputs of the amplifier is short-circuited to one of the supply lines, this will be detected by the OverCurrent Protection (OCP). If the output current exceeds the maximum output current of 8 A, this current will be limited by the amplifier to 8 A while the amplifier outputs remain switching (the amplifier is NOT shut-down completely).

The amplifier can distinguish between an impedance drop of the loudspeaker and a low-ohmic short across the load. In the TDA8920B this impedance threshold (Z_{th}) depends on the supply voltage used.

When a short is made across the load causing the impedance to drop below the threshold level (< Z_{th}) then the amplifier is switched off completely and after a time of 100 ms it will try to restart again. If the short circuit condition is still present after this time this cycle will be repeated. The average dissipation will be low because of this low duty cycle.

© Koninklijke Philips Electronics N.V. 2005. All rights reserved.

In case of an impedance drop (e.g. due to dynamic behavior of the loudspeaker) the same protection will be activated; the maximum output current is again limited to 8 A, but the amplifier will NOT switch-off completely (thus preventing audio holes from occurring). Result will be a clipping output signal without any artefacts.

See also Section 13.6 for more information on this maximum output current limiting feature.

8.3.3 Window Protection (WP)

During the start-up sequence, when pin MODE is switched from standby to mute, the conditions at the output terminals of the power stage are checked. In the event of a short-circuit at one of the output terminals to V_{DD} or V_{SS} the start-up procedure is interrupted and the system waits for open-circuit outputs. Because the test is done before enabling the power stages, no large currents will flow in the event of a short-circuit. This system is called Window Protection (WP) and protects for short-circuits at both sides of the output filter to both supply lines. When there is a short-circuit from the power PWM output of the power stage to one of the supply lines (before the demodulation filter) it will also be detected by the start-up safety test. Practical use of this test feature can be found in detection of short-circuits on the printed-circuit board.

Remark: This test is operational during (every) start-up sequence at a transition between Standby and Mute mode. However when the amplifier is completely shut-down due to activation of the OverCurrent Protection (OCP) because a short to one of the supply lines occurred, then during restart (after 100 ms) the window protection will be activated. As a result the amplifier will not start-up until the short to the supply line is removed.

© Koninklijke Philips Electronics N.V. 2005. All rights reserved.

8.3.4 Supply voltage protections

If the supply voltage drops below ±12.5 V, the UnderVoltage Protection (UVP) circuit is activated and the system will shut-down correctly. If the internal clock is used, this switch-off will be silent and without pop noise. When the supply voltage rises above the threshold level, the system is restarted again after 100 ms. If the supply voltage exceeds ±33 V the OverVoltage Protection (OVP) circuit is activated and the power stages will shut-down. It is re-enabled as soon as the supply voltage drops below the threshold level. So in this case no timer of 100 ms is started.

An additional UnBalance Protection (UBP) circuit compares the positive analog (V_{DDA}) and the negative analog (V_{SSA}) supply voltages and is triggered if the voltage difference between them exceeds a certain level. This level depends on the sum of both supply voltages. An expression for the unbalanced threshold level is as follows: $V_{th(ub)} \approx 0.15 \times (V_{DDA} + V_{SSA})$.

When the supply voltage difference drops below the threshold level, the system is restarted again after 100 ms.

Example: With a symmetrical supply of ±30 V, the protection circuit will be triggered if the unbalance exceeds approximately 9 V; see also Section 13.7.

In Table 4 an overview is given of all protections and the effect on the output signal.

Table 4: Overview of TDA8920B protections

Protection name	Complete shut-down	Restart directly	Restart every 100 ms
OTP	Y	Y [1]	N [1]
OCP	N [2]	Y [2]	N [2]
WP	Y [3]	Y	N
UVP	Y	N	Y
OVP	Y	Y	N
UBP	Y	N	Y

[1] Hysteresis of 20 °C will influence restart timing depending on heatsink size.

[2] Only complete shut-down of amplifier if short-circuit impedance is below threshold of 1 Ω. In all other cases current limiting: resulting in clipping output signal.

[3] Fault condition detected during (every) transition between standby-to-mute and during restart after activation of OCP (short to one of the supply lines).

© Koninklijke Philips Electronics N.V. 2005. All rights reserved.

8.4 Differential audio inputs

For a high common mode rejection ratio and a maximum of flexibility in the application, the audio inputs are fully differential. By connecting the inputs anti-parallel the phase of one of the channels can be inverted, so that a load can be connected between the two output filters. In this case the system operates as a mono BTL amplifier and with the same loudspeaker impedance an approximately four times higher output power can be obtained.

The input configuration for a mono BTL application is illustrated in Figure 6.

In the stereo single-ended configuration it is also recommended to connect the two differential inputs in anti-phase. This has advantages for the current handling of the power supply at low signal frequencies.

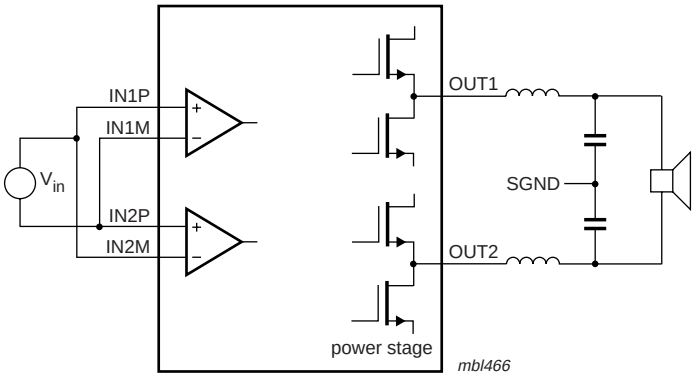

Fig 6. Input configuration for mono BTL application

9. Limiting values

Table 5: Limiting values

In accordance with the Absolute Maximum Rating System (IEC 60134).

Symbol	Parameter	Conditions		Min	Max	Unit
V_P	supply voltage					
		operating		-	±30	V
		non operating	[1]	-	±32	V
I_{ORM}	repetitive peak current in output pin	maximum output current limiting	[2]	8	-	A
T_{stg}	storage temperature			–55	+150	°C
T_{amb}	ambient temperature			–40	+85	°C
T_j	junction temperature			-	150	°C

[1] Overvoltage protection might be activated.

[2] Current limiting concept. See also Section 13.6.

© Koninklijke Philips Electronics N.V. 2005. All rights reserved.

10. Thermal characteristics

Table 6: Thermal characteristics

Symbol	Parameter	Conditions		Typ	Unit
$R_{th(j-a)}$	thermal resistance from junction to ambient		[1]		
	TDA8920BTH	in free air		35	K/W
	TDA8920BJ	in free air		35	K/W
$R_{th(j-c)}$	thermal resistance from junction to case		[1]		
	TDA8920BTH			1.3	K/W
	TDA8920BJ			1.3	K/W

[1] See also Section 13.5.

11. Static characteristics

Table 7: Static characteristics

V_P = ±27 V; f_{osc} = 317 kHz; T_{amb} = 25 °C; unless otherwise specified.

Symbol	Parameter	Conditions		Min	Typ	Max	Unit
Supply							
V_P	supply voltage		[1]	±12.5	±27	±30	V
$I_{q(tot)}$	total quiescent supply current	no load, no filter; no RC-snubber network connected		-	50	65	mA
I_{stb}	standby supply current			-	150	500	µA
Mode select input; pin MODE							
V_I	input voltage		[2]	0	-	6	V
I_I	input current	V_I = 5.5 V		-	100	300	µA
V_{stb}	input voltage for Standby mode		[2] [3]	0	-	0.8	V
V_{mute}	input voltage for Mute mode		[2] [3]	2.2	-	3.0	V
V_{on}	input voltage for Operating mode		[2] [3]	4.2	-	6	V
Audio inputs; pins IN1M, IN1P, IN2P and IN2M							
V_I	DC input voltage		[2]	-	0	-	V
Amplifier outputs; pins OUT1 and OUT2							
$\lvert V_{OO(SE)(mute)} \rvert$	mute SE output offset voltage			-	-	15	mV
$\lvert V_{OO(SE)(on)} \rvert$	operating SE output offset voltage		[4]	-	-	150	mV
$\lvert V_{OO(BTL)(mute)} \rvert$	mute BTL output offset voltage			-	-	21	mV
$\lvert V_{OO(BTL)(on)} \rvert$	operating BTL output offset voltage		[4]	-	-	210	mV
Stabilizer output; pin STABI							
$V_{o(stab)}$	stabilizer output voltage	mute and operating; with respect to V_{SSP1}		11	12.5	15	V

© Koninklijke Philips Electronics N.V. 2005. All rights reserved.

Table 7: Static characteristics *...continued*

V_P = ±27 V; f_{osc} = 317 kHz; T_{amb} = 25 °C; unless otherwise specified.

Symbol	Parameter	Conditions	Min	Typ	Max	Unit
Temperature protection						
T_{prot}	temperature protection activation		-	150	-	°C
T_{hys}	hysteresis of temperature protection		-	20	-	°C

[1] The circuit is DC adjusted at V_P = ±12.5 V to ±30 V.

[2] With respect to SGND (0 V).

[3] The transition between Standby and Mute mode has hysteresis, while the slope of the transition between Mute and Operating mode is determined by the time-constant of the RC-network on the MODE pin; see Figure 7.

[4] DC output offset voltage is applied to the output during the transition between Mute and Operating mode in a gradual way. The slope of the dV/dt caused by any DC output offset is determined by the time-constant of the RC-network on the MODE pin.

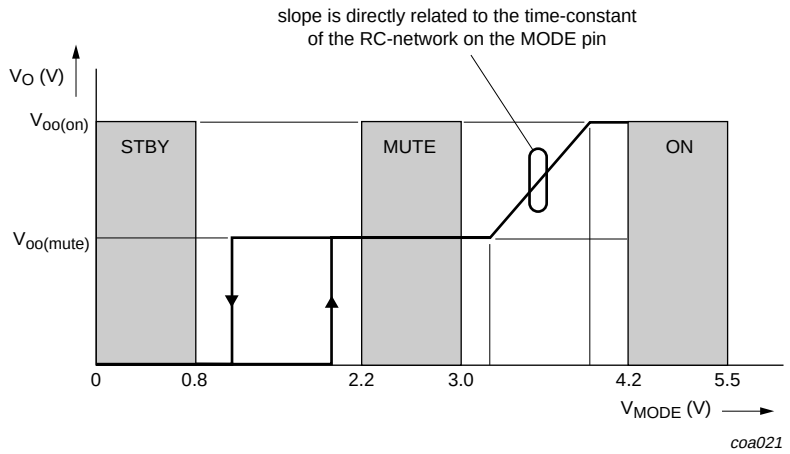

Fig 7. Behavior of mode selection pin MODE

12. Dynamic characteristics

12.1 Switching characteristics

Table 8: Switching characteristics

V_{DD} = ±27 V; T_{amb} = 25 °C; unless otherwise specified.

Symbol	Parameter	Conditions	Min	Typ	Max	Unit
Internal oscillator						
f_{osc}	typical internal oscillator frequency	R_{OSC} = 30.0 kΩ	290	317	344	kHz
$f_{osc(int)}$	internal oscillator frequency range		210	-	600	kHz
External oscillator or frequency tracking						
V_{OSC}	high-level voltage on pin OSC		SGND + 4.5	SGND + 5	SGND + 6	V
$V_{OSC(trip)}$	trip level for tracking on pin OSC		-	SGND + 2.5	-	V
f_{track}	frequency range for tracking		210	-	600	kHz

© Koninklijke Philips Electronics N.V. 2005. All rights reserved.

12.2 Stereo and dual SE application

Table 9: Stereo and dual SE application characteristics

V_P = ±27 V; R_L = 4 Ω; f_i = 1 kHz; f_{osc} = 317 kHz; R_{sL} < 0.1 Ω [1]; T_{amb} = 25 °C; unless otherwise specified.

Symbol	Parameter	Conditions		Min	Typ	Max	Unit
P_o	output power	R_L = 3 Ω; V_P = ±27 V	[2]				
		THD = 0.5 %		-	87	-	W
		THD = 10 %		-	110	-	W
		R_L = 4 Ω; V_P = ±27 V	[2]				
		THD = 0.5 %		-	69	-	W
		THD = 10 %		-	86	-	W
		R_L = 6 Ω; V_P = ±27 V	[2]				
		THD = 0.5 %		-	48	-	W
		THD = 10 %		-	60	-	W
		R_L = 8 Ω; V_P = ±27 V	[2]				
		THD = 0.5 %		-	36	-	W
		THD = 10 %		-	45	-	W
THD	total harmonic distortion	P_o = 1 W	[3]				
		f_i = 1 kHz		-	0.02	0.05	%
		f_i = 6 kHz		-	0.03	-	%
$G_{v(cl)}$	closed loop voltage gain			29	30	31	dB
SVRR	supply voltage ripple rejection	operating	[4]				
		f_i = 100 Hz		-	55	-	dB
		f_i = 1 kHz		40	50	-	dB
		mute; f_i = 100 Hz	[4]	-	55	-	dB
		standby; f_i = 100 Hz	[4]	-	80	-	dB
$\|Z_i\|$	input impedance			45	68	-	kΩ
$V_{n(o)}$	noise output voltage	operating					
		R_s = 0 Ω	[5]	-	210	-	μV
		mute	[6]	-	160	-	μV
α_{cs}	channel separation		[7]	-	70	-	dB
$\|\Delta G_v\|$	channel unbalance			-	-	1	dB
$V_{o(mute)}$	output signal in mute		[8]	-	100	-	μV
CMRR	common mode rejection ratio	$V_{i(CM)}$ = 1 V (RMS)		-	75	-	dB

[1] R_{sL} is the series resistance of inductor of low-pass LC filter in the application.

[2] Output power is measured indirectly; based on R_{DSon} measurement. See also Section 13.3.

[3] Total harmonic distortion is measured in a bandwidth of 22 Hz to 20 kHz, using AES17 20 kHz brickwall filter. Maximum limit is guaranteed but may not be 100 % tested.

[4] $V_{ripple} = V_{ripple(max)}$ = 2 V (p-p); R_s = 0 Ω.

[5] B = 22 Hz to 20 kHz, using AES17 20 kHz brickwall filter.

[6] B = 22 Hz to 22 kHz, using AES17 20 kHz brickwall filter; independent of R_s.

[7] P_o = 1 W; R_s = 0 Ω; f_i = 1 kHz.

[8] $V_i = V_{i(max)}$ = 1 V (RMS); f_i = 1 kHz.

© Koninklijke Philips Electronics N.V. 2005. All rights reserved.

12.3 Mono BTL application

Table 10: Mono BTL application characteristics

V_P = ±27 V; R_L = 8 Ω; f_i = 1 kHz; f_{osc} = 317 kHz; R_{sL} < 0.1 Ω [1]; T_{amb} = 25 °C; unless otherwise specified.

Symbol	Parameter	Conditions		Min	Typ	Max	Unit
P_o	output power	R_L = 6 Ω; V_P = ±27 V	[2]				
		THD = 0.5 %		-	174	-	W
		THD = 10 %		-	210	-	W
		R_L = 8 Ω; V_P = ±27 V	[2]				
		THD = 0.5 %		-	138	-	W
		THD = 10 %		-	173	-	W
THD	total harmonic distortion	P_o = 1 W	[3]				
		f_i = 1 kHz		-	0.02	0.05	%
		f_i = 6 kHz		-	0.03	-	%
$G_{v(cl)}$	closed loop voltage gain			35	36	37	dB
SVRR	supply voltage ripple rejection	operating	[4]				
		f_i = 100 Hz		-	80	-	dB
		f_i = 1 kHz		70	80	-	dB
		mute; f_i = 100 Hz	[4]	-	80	-	dB
		standby; f_i = 100 Hz	[4]	-	80	-	dB
$\|Z_i\|$	input impedance			22	34	-	kΩ
$V_{n(o)}$	noise output voltage	operating					
		R_s = 0 Ω	[5]	-	300	-	μV
		mute	[6]	-	220	-	μV
$V_{o(mute)}$	output signal in mute		[7]	-	200	-	μV
CMRR	common mode rejection ratio	$V_{i(CM)}$ = 1 V (RMS)		-	75	-	dB

[1] R_{sL} is the series resistance of inductor of low-pass LC filter in the application.

[2] Output power is measured indirectly; based on R_{DSon} measurement. See also Section 13.3.

[3] Total harmonic distortion is measured in a bandwidth of 22 Hz to 20 kHz, using an AES17 20 kHz brickwall filter. Maximum limit is guaranteed but may not be 100 % tested.

[4] $V_{ripple} = V_{ripple(max)}$ = 2 V (p-p); R_s = 0 Ω.

[5] B = 22 Hz to 20 kHz, using an AES17 20 kHz brickwall filter.

[6] B = 22 Hz to 20 kHz, using an AES17 20 kHz brickwall filter; independent of R_s.

[7] $V_i = V_{i(max)}$ = 1 V (RMS); f_i = 1 kHz.

13. Application information

13.1 BTL application

When using the power amplifier in a mono BTL application the inputs of both channels must be connected in parallel and the phase of one of the inputs must be inverted (see Figure 6). In principle the loudspeaker can be connected between the outputs of the two single-ended demodulation filters.

© Koninklijke Philips Electronics N.V. 2005. All rights reserved.

13.2 MODE pin

For pop noise-free start-up an RC time-constant must be applied on the MODE pin. The bias-current setting of the VI-converter input is directly related to the voltage on the MODE pin. In turn the bias-current setting of the VI converters is directly related to the DC output offset voltage. Thus a slow dV/dt on the MODE pin results in a slow dV/dt for the DC output offset voltage, resulting in pop noise-free start-up. A time-constant of 500 ms is sufficient to guarantee pop noise-free start-up (see also Figure 4, 5 and 7).

13.3 Output power estimation

The achievable output powers in several applications (SE and BTL) can be estimated using the following expressions:

SE:

$$P_{o(1\%)} = \frac{\left[\frac{R_L}{R_L + 0.4} \times V_P \times (1 - t_{min} \times f_{osc})\right]^2}{2 \times R_L} \quad (1)$$

Maximum current (internally limited to 8 A):

$$I_{o(peak)} = \frac{V_P \times (1 - t_{min} \times f_{osc})}{R_L + 0.4} \quad (2)$$

BTL:

$$P_{o(1\%)} = \frac{\left[\frac{R_L}{R_L + 0.8} \times 2V_P \times (1 - t_{min} \times f_{osc})\right]^2}{2 \times R_L} \quad (3)$$

Maximum current (internally limited to 8 A):

$$I_{o(peak)} = \frac{2V_P \times (1 - t_{min} \times f_{osc})}{R_L + 0.8} \quad (4)$$

Variables:

R_L = load impedance

f_{osc} = oscillator frequency

t_{min} = minimum pulse width (typically 150 ns)

V_P = single-sided supply voltage (so, if supply is ±30 V symmetrical, then V_P = 30 V)

$P_{o(1\%)}$ = output power just at clipping

$P_{o(10\%)}$ = output power at THD = 10 %

$P_{o(10\%)} = 1.24 \times P_{o(1\%)}$.

13.4 External clock

When using an external clock the following accuracy of the duty cycle of the external clock has to be taken into account: 47.5 % < δ < 52.5 %.

© Koninklijke Philips Electronics N.V. 2005. All rights reserved.

If two or more class-D amplifiers are used in the same audio application, it is strongly recommended that all devices run at the same switching frequency. This can be realized by connecting all OSC pins together and feed them from an external central oscillator. Using an external oscillator it is necessary to force pin OSC to a DC-level above SGND for switching from the internal to an external oscillator. In this case the internal oscillator is disabled and the PWM modulator will be switched on the external frequency. The frequency range of the external oscillator must be in the range as specified in the switching characteristics; see Section 12.1.

In an application circuit:

- Internal oscillator: R_{OSC} connected between pin OSC and V_{SSA}
- External oscillator: connect the oscillator signal between pins OSC and SGND; R_{OSC} and C_{OSC} removed

13.5 Heatsink requirements

In some applications it may be necessary to connect an external heatsink to the TDA8920B. Limiting factor is the 150 °C maximum junction temperature $T_{j(max)}$ which cannot be exceeded. The expression below shows the relationship between the maximum allowable power dissipation and the total thermal resistance from junction to ambient:

$$R_{th(j-a)} = \frac{T_{j(max)} - T_{amb}}{P_{diss}} \quad (5)$$

P_{diss} is determined by the efficiency (η) of the TDA8920B. The efficiency measured in the TDA8920B as a function of output power is given in Figure 21. The power dissipation can be derived as a function of output power (see Figure 20).

The derating curves (given for several values of $R_{th(j-a)}$) are illustrated in Figure 8. A maximum junction temperature T_j = 150 °C is taken into account. From Figure 8 the maximum allowable power dissipation for a given heatsink size can be derived or the required heatsink size can be determined at a required dissipation level.

© Koninklijke Philips Electronics N.V. 2005. All rights reserved.

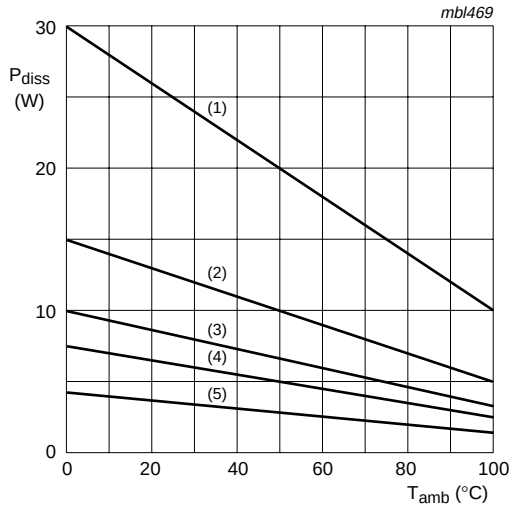

(1) $R_{th(j-a)}$ = 5 K/W.

(2) $R_{th(j-a)}$ = 10 K/W.

(3) $R_{th(j-a)}$ = 15 K/W.

(4) $R_{th(j-a)}$ = 20 K/W.

(5) $R_{th(j-a)}$ = 35 K/W.

Fig 8. Derating curves for power dissipation as a function of maximum ambient temperature

13.6 Output current limiting

To guarantee the robustness of the class-D amplifier the maximum output current which can be delivered by the output stage is limited. An advanced OverCurrent Protection (OCP) is included for each output power switch.

When the current flowing through any of the power switches exceeds the defined internal threshold of 8 A (e.g. in case of a short-circuit to the supply lines or a short-circuit across the load) the maximum output current of the amplifier will be regulated to 8 A.

The TDA8920B amplifier can distinguish between a low-ohmic short circuit condition and other overcurrent conditions like dynamic impedance drops of the loudspeakers used. The impedance threshold (Z_{th}) depends on the supply voltage used.

Depending on the impedance of the short circuit the amplifier will react as follows:

1. Short-circuit impedance > Z_{th}:

   the maximum output current of the amplifier is regulated to 8 A, but the amplifier will not shut-down its PWM outputs. Effectively this results in a clipping output signal across the load (behavior is very similar to voltage clipping).

2. Short-circuit impedance < Z_{th}:

   the amplifier will limit the maximum output current to 8 A and at the same time the capacitor on the PROT pin is discharged. When the voltage across this capacitor drops below an internal threshold voltage the amplifier will shut-down completely and an internal timer will be started.

© Koninklijke Philips Electronics N.V. 2005. All rights reserved.

A typical value for the capacitor on the PROT pin is 220 pF. After a fixed time of 100 ms the amplifier is switched on again. If the requested output current is still too high the amplifier will switch-off again. Thus the amplifier will try to switch to the Operating mode every 100 ms. The average dissipation will be low in this situation because of this low duty cycle. If the overcurrent condition is removed the amplifier will remain in Operating mode once restarted.

In this way the TDA8920B amplifier is fully robust against short circuit conditions while at the same time so-called audio holes as a result of loudspeaker impedance drops are eliminated.

13.7 Pumping effects

In a typical stereo half-bridge SE application the TDA8920B class-D amplifier is supplied by a symmetrical voltage (e.g V_{DD} = +27 V and V_{SS} = –27 V). When the amplifier is used in a SE configuration, a so-called ‘pumping effect’ can occur. During one switching interval, energy is taken from one supply (e.g. V_{DD}), while a part of that energy is delivered back to the other supply line (e.g. V_{SS}) and visa versa. When the voltage supply source cannot sink energy, the voltage across the output capacitors of that voltage supply source will increase: the supply voltage is pumped to higher levels. The voltage increase caused by the pumping effect depends on:

- Speaker impedance
- Supply voltage
- Audio signal frequency
- Value of decoupling capacitors on supply lines
- Source and sink currents of other channels

The pumping effect should not cause a malfunction of either the audio amplifier and/or the voltage supply source. For instance, this malfunction can be caused by triggering of the undervoltage or overvoltage protection or unbalance protection of the amplifier.

Best remedy for pumping effects is to use the TDA8920B in a mono full-bridge application or in case of stereo half-bridge application adapt the power supply (e.g. increase supply decoupling capacitors).

© Koninklijke Philips Electronics N.V. 2005. All rights reserved.

13.8 Application schematic

Notes for the application schematic:

- A solid ground plane around the switching amplifier is necessary to prevent emission
- 100 nF capacitors must be placed as close as possible to the power supply pins of the TDA8920BTH
- The internal heat spreader of the TDA8920BTH is internally connected to V_{SS}
- The external heatsink must be connected to the ground plane
- Use a thermal conductive electrically non-conductive Sil-Pad between the backside of the TDA8920BTH and a small external heatsink
- The differential inputs enable the best system level audio performance with unbalanced signal sources. In case of hum due to floating inputs, connect the shielding or source ground to the amplifier ground. Jumpers J1 and J2 are open on set level and are closed on the stand-alone demo board
- Minimum total required capacitance per power supply line is 3300 μF

© Koninklijke Philips Electronics N.V. 2005. All rights reserved.

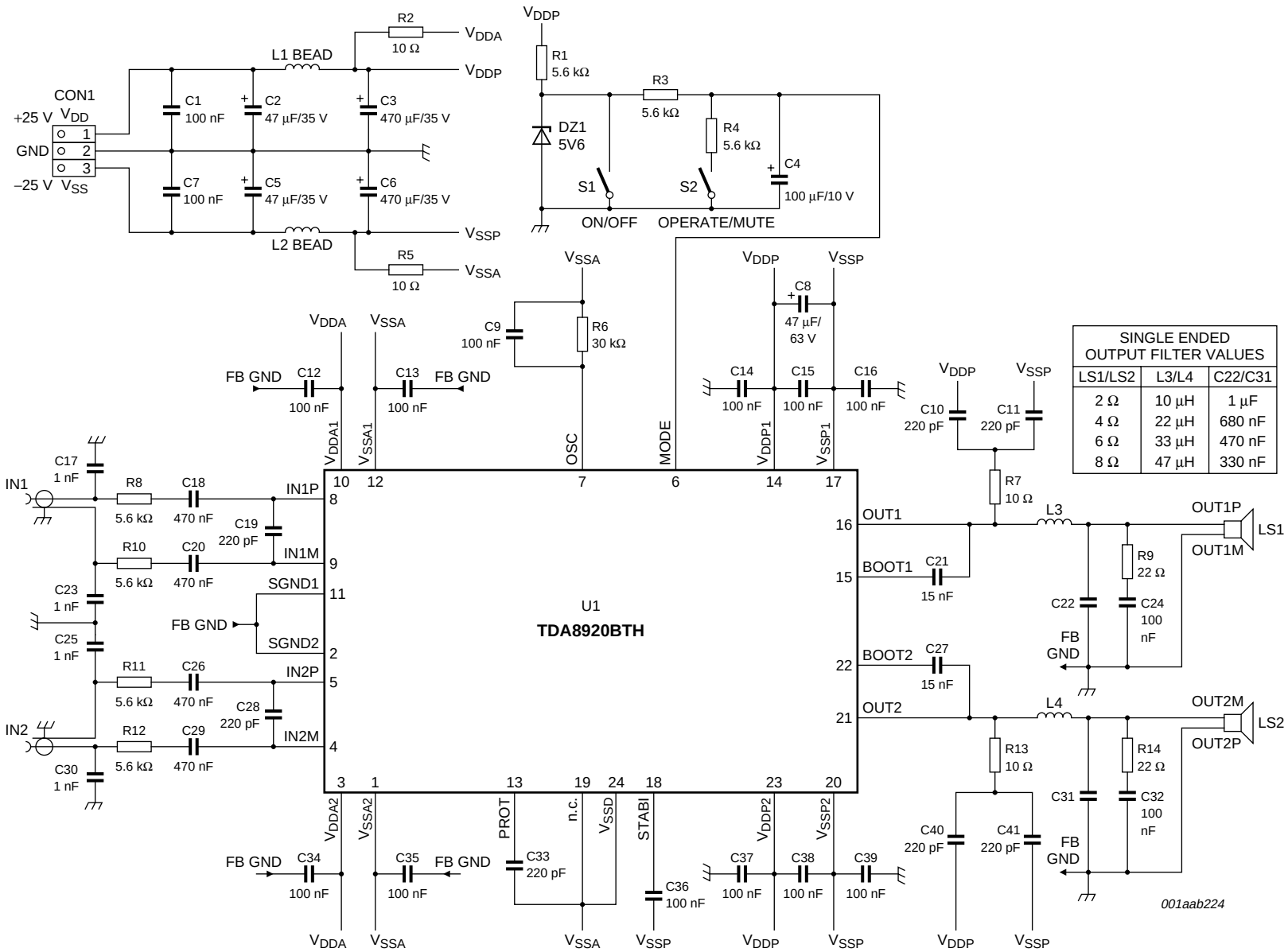

SINGLE ENDED OUTPUT FILTER VALUES		
LS1/LS2	L3/L4	C22/C31
2 Ω	10 µH	1 µF
4 Ω	22 µH	680 nF
6 Ω	33 µH	470 nF
8 Ω	47 µH	330 nF

Fig 9. TDA8920BTH application schematic

© Koninklijke Philips Electronics N.V. 2005. All rights reserved.

13.9 Curves measured in reference design

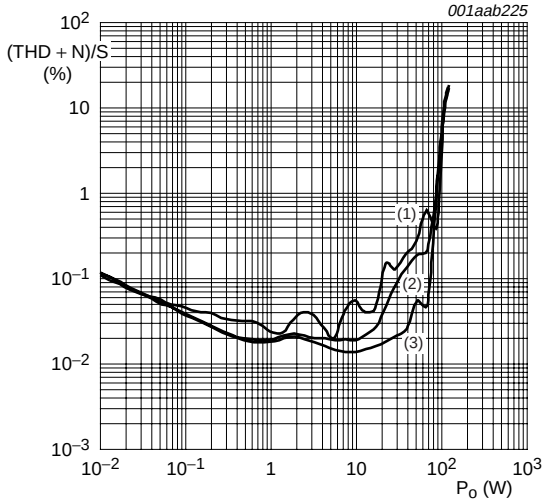

V_P = ±27 V; 2 × 3 Ω SE configuration.

(1) f = 6 kHz.

(2) f = 1 kHz.

(3) f = 100 Hz.

Fig 10. (THD + N)/S as a function of output power; SE configuration with 2 × 3 Ω load

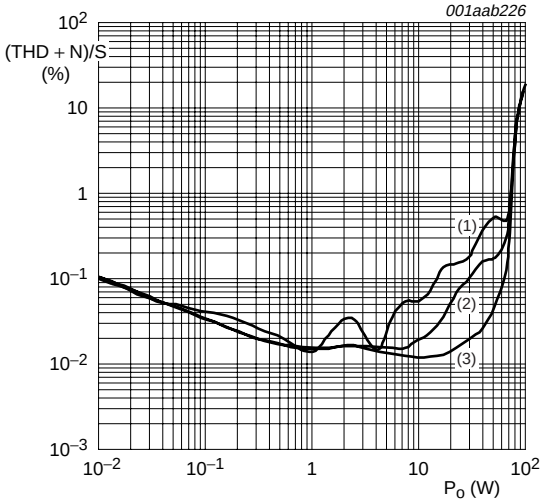

V_P = ±27 V; 2 × 4 Ω SE configuration.

(1) f = 6 kHz.

(2) f = 1 kHz.

(3) f = 100 Hz.

Fig 11. (THD + N)/S as a function of output power; SE configuration with 2 × 4 Ω load

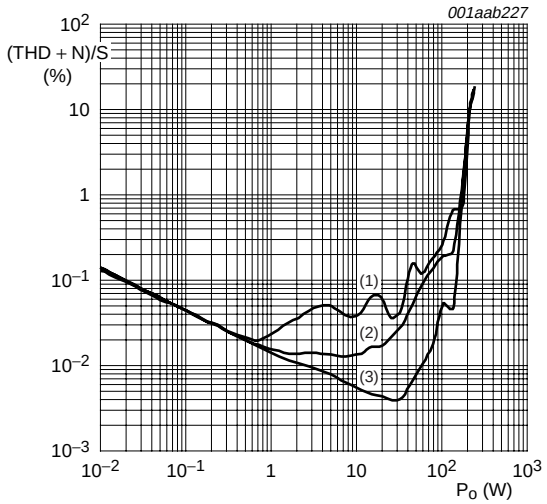

V_P = ±27 V; 1 × 6 Ω BTL configuration.

(1) f = 6 kHz.

(2) f = 1 kHz.

(3) f = 100 Hz.

Fig 12. (THD + N)/S as a function of output power; BTL configuration with 1 × 6 Ω load

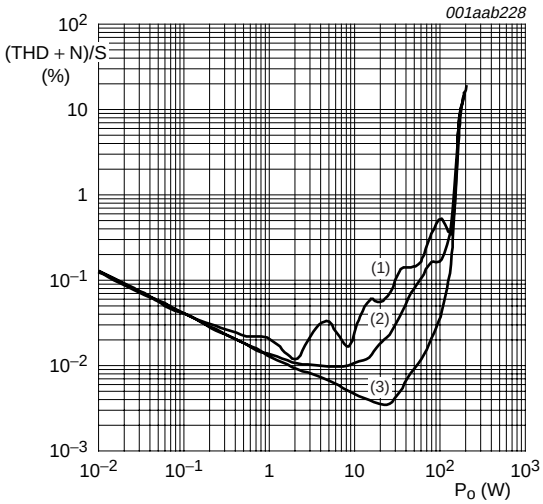

V_P = ±27 V; 1 × 8 Ω BTL configuration.

(1) f = 6 kHz.

(2) f = 1 kHz.

(3) f = 100 Hz.

Fig 13. (THD + N)/S as a function of output power; BTL configuration with 1 × 8 Ω load

© Koninklijke Philips Electronics N.V. 2005. All rights reserved.

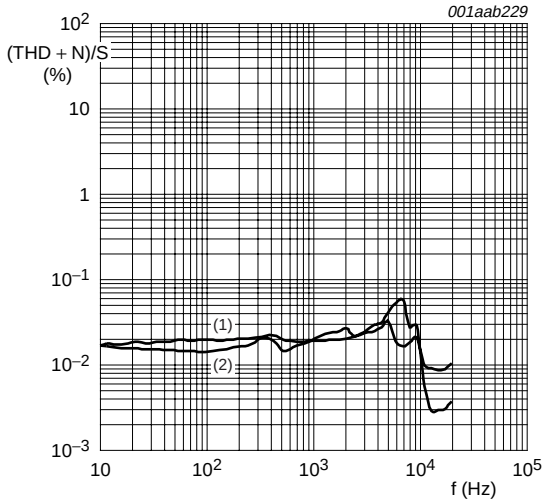

V_P = ±27 V; 2 × 3 Ω SE configuration.

(1) P_{out} = 1 W.

(2) P_{out} = 10 W.

Fig 14. (THD + N)/S as a function of frequency; SE configuration with 2 × 3 Ω load

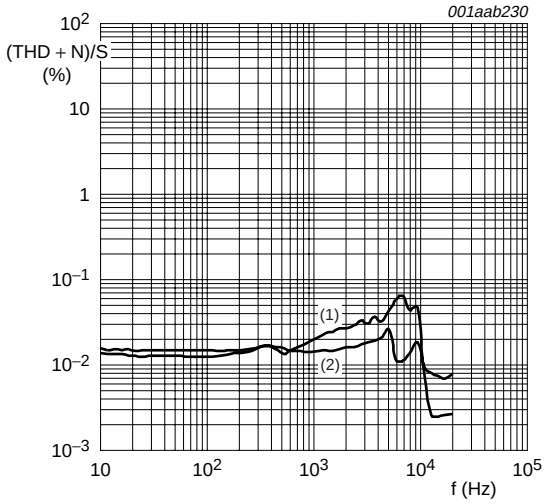

V_P = ±27 V; 2 × 4 Ω SE configuration.

(1) P_{out} = 1 W.

(2) P_{out} = 10 W.

Fig 15. (THD + N)/S as a function of frequency; SE configuration with 2 × 4 Ω load

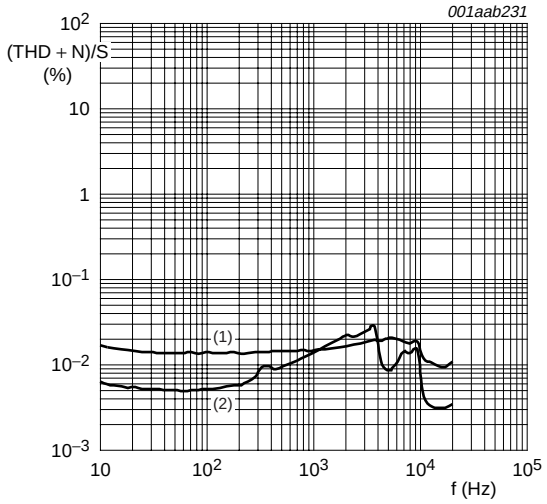

V_P = ±27 V; 1 × 6 Ω BTL configuration.

(1) P_{out} = 1 W.

(2) P_{out} = 10 W.

Fig 16. (THD + N)/S as a function of frequency; BTL configuration with 1 × 6 Ω load

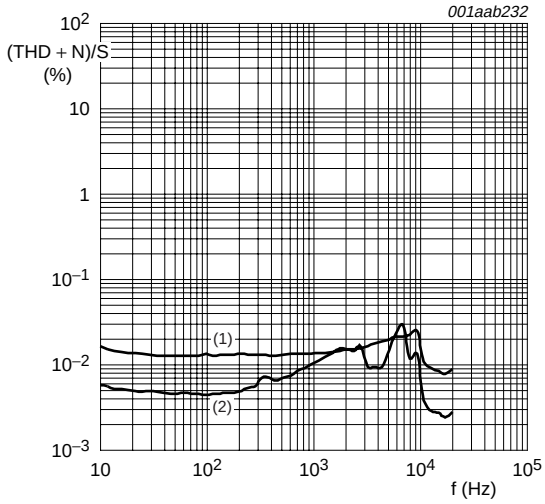

V_P = ±27 V; 1 × 8 Ω BTL configuration.

(1) P_{out} = 1 W.

(2) P_{out} = 10 W.

Fig 17. (THD + N)/S as a function of frequency; BTL configuration with 1 × 8 Ω load

© Koninklijke Philips Electronics N.V. 2005. All rights reserved.

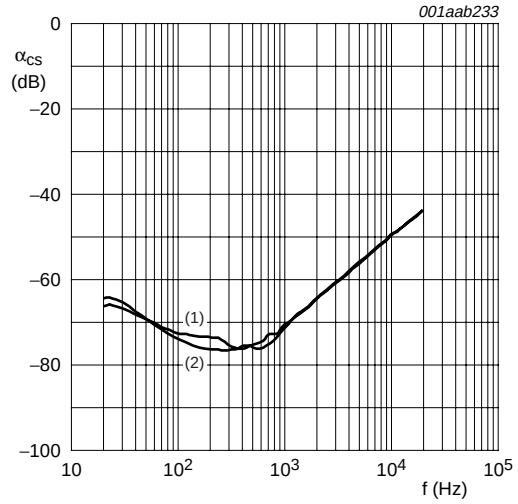

V_P = ±27 V; 2 × 3 Ω SE configuration.

(1) P_{out} = 10 W.

(2) P_{out} = 1 W.

Fig 18. Channel separation as a function of frequency; SE configuration with 2 × 3 Ω load

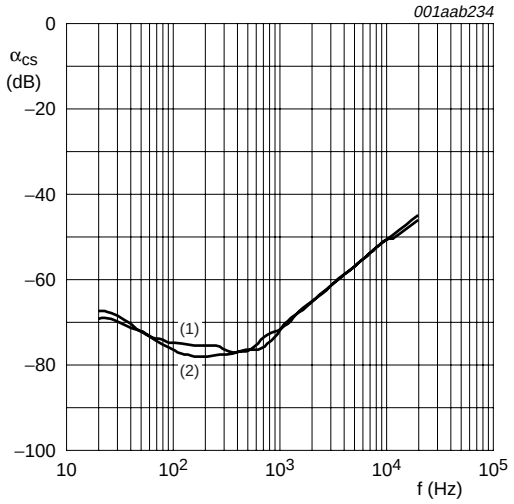

V_P = ±27 V; 2 × 4 Ω SE configuration.

(1) P_{out} = 10 W.

(2) P_{out} = 1 W.

Fig 19. Channel separation as a function of frequency; SE configuration with 2 × 4 Ω load

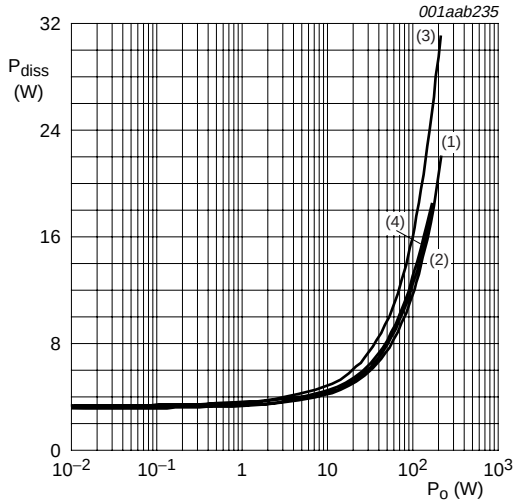

V_P = ±27 V; f = 1 kHz.

(1) 2 × 3 Ω SE configuration.

(2) 2 × 4 Ω SE configuration.

(3) 1 × 6 Ω BTL configuration.

(4) 1 × 8 Ω BTL configuration.

Fig 20. Power dissipation as a function of total output power

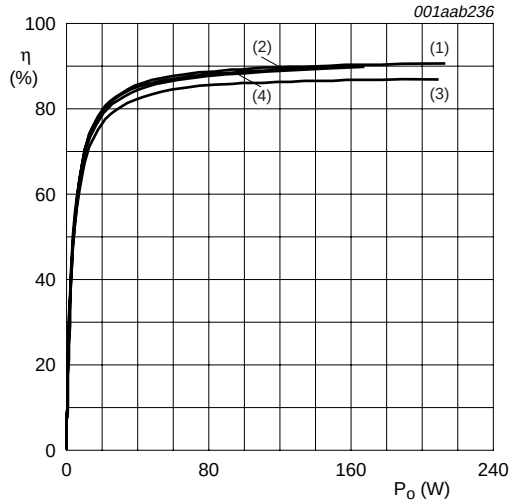

V_P = ±27 V; f = 1 kHz.

(1) 2 × 3 Ω SE configuration.

(2) 2 × 4 Ω SE configuration.

(3) 1 × 6 Ω BTL configuration.

(4) 1 × 8 Ω BTL configuration.

Fig 21. Efficiency as a function of total output power

© Koninklijke Philips Electronics N.V. 2005. All rights reserved.

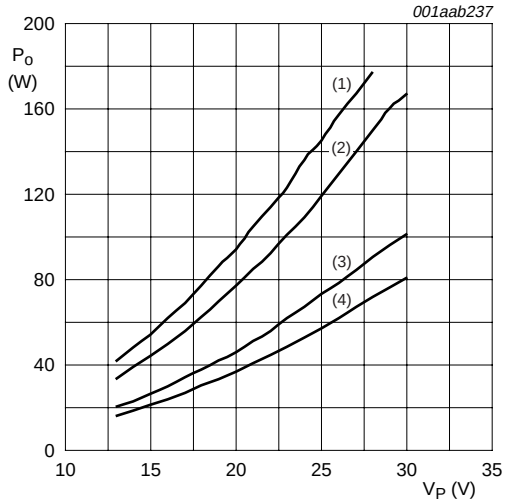

f = 1 kHz.

(1) 1 × 6 Ω BTL configuration.

(2) 1 × 8 Ω BTL configuration.

(3) 2 × 3 Ω SE configuration.

(4) 2 × 4 Ω SE configuration.

Fig 22. Output power as a function of supply voltage; THD + N = 0.5 %

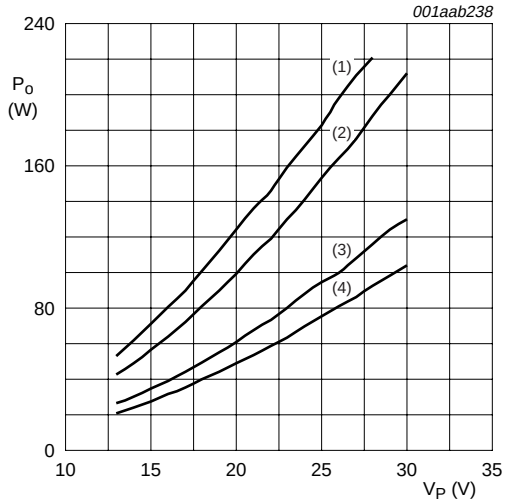

f = 1 kHz.

(1) 1 × 6 Ω BTL configuration.

(2) 1 × 8 Ω BTL configuration.

(3) 2 × 3 Ω SE configuration.

(4) 2 × 4 Ω SE configuration.

Fig 23. Output power as a function of supply voltage; THD + N = 10 %

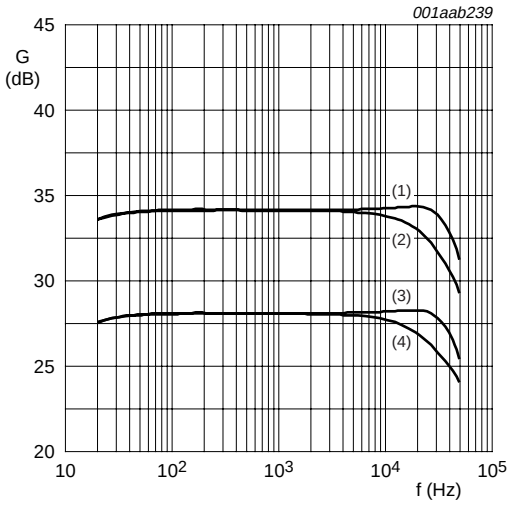

V_i = 100 mV; R_s = 5.6 kΩ; C_i = 330 pF; V_P = ±27 V.

(1) 1 × 8 Ω BTL configuration.

(2) 1 × 6 Ω BTL configuration.

(3) 2 × 4 Ω BTL configuration.

(4) 2 × 3 Ω BTL configuration.

Fig 24. Gain as a function of frequency; R_s = 5.6 kΩ and C_i = 330 pF

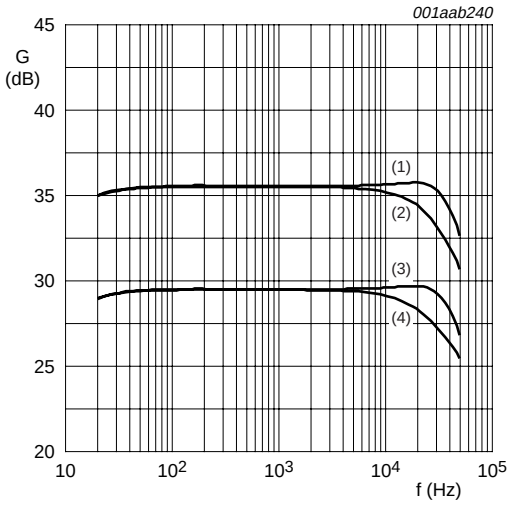

V_i = 100 mV; R_s = 0 Ω; C_i = 330 pF; V_P = ±27 V.

(1) 1 × 8 Ω BTL configuration.

(2) 1 × 6 Ω BTL configuration.

(3) 2 × 4 Ω BTL configuration.

(4) 2 × 3 Ω BTL configuration.

Fig 25. Gain as a function of frequency; R_s = 0 Ω and C_i = 330 pF

© Koninklijke Philips Electronics N.V. 2005. All rights reserved.

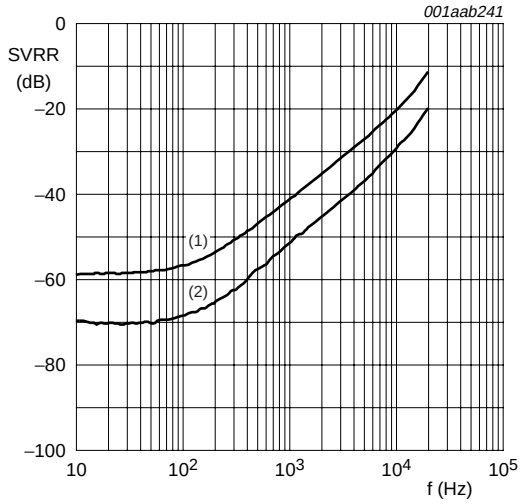

V_P = ±27 V; V_{ripple} = 2 V (p-p).

(1) Both supply lines rippled.

(2) One supply line rippled.

Fig 26. SVRR as a function of frequency

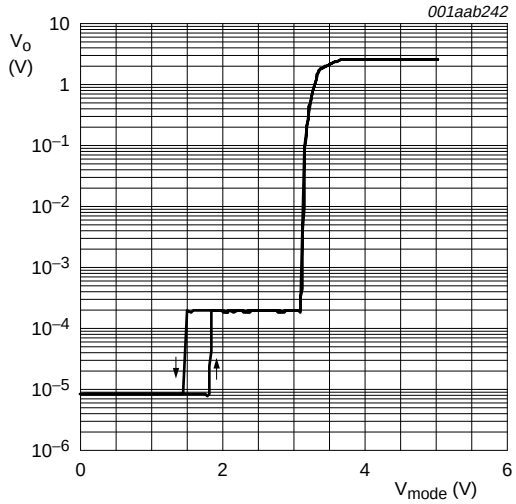

V_i = 100 mV; f = 1 kHz.

Fig 27. Output voltage as a function of mode voltage

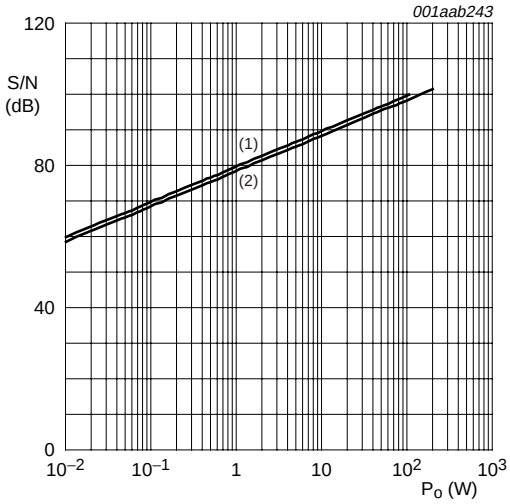

V_P = ±27 V; R_s = 5.6 kΩ; 20 kHz AES17 filter.

(1) 2 × 3 Ω SE configuration and 1 × 6 Ω BTL configuration.

(2) 2 × 4 Ω SE configuration and 1 × 8 Ω BTL configuration.

Fig 28. S/N ratio as a function of output power

14. Test information

14.1 Quality information

The *General Quality Specification for Integrated Circuits, SNW-FQ-611* is applicable.

© Koninklijke Philips Electronics N.V. 2005. All rights reserved.

15. Package outline

HSOP24: plastic, heatsink small outline package; 24 leads; low stand-off height **SOT566-3**

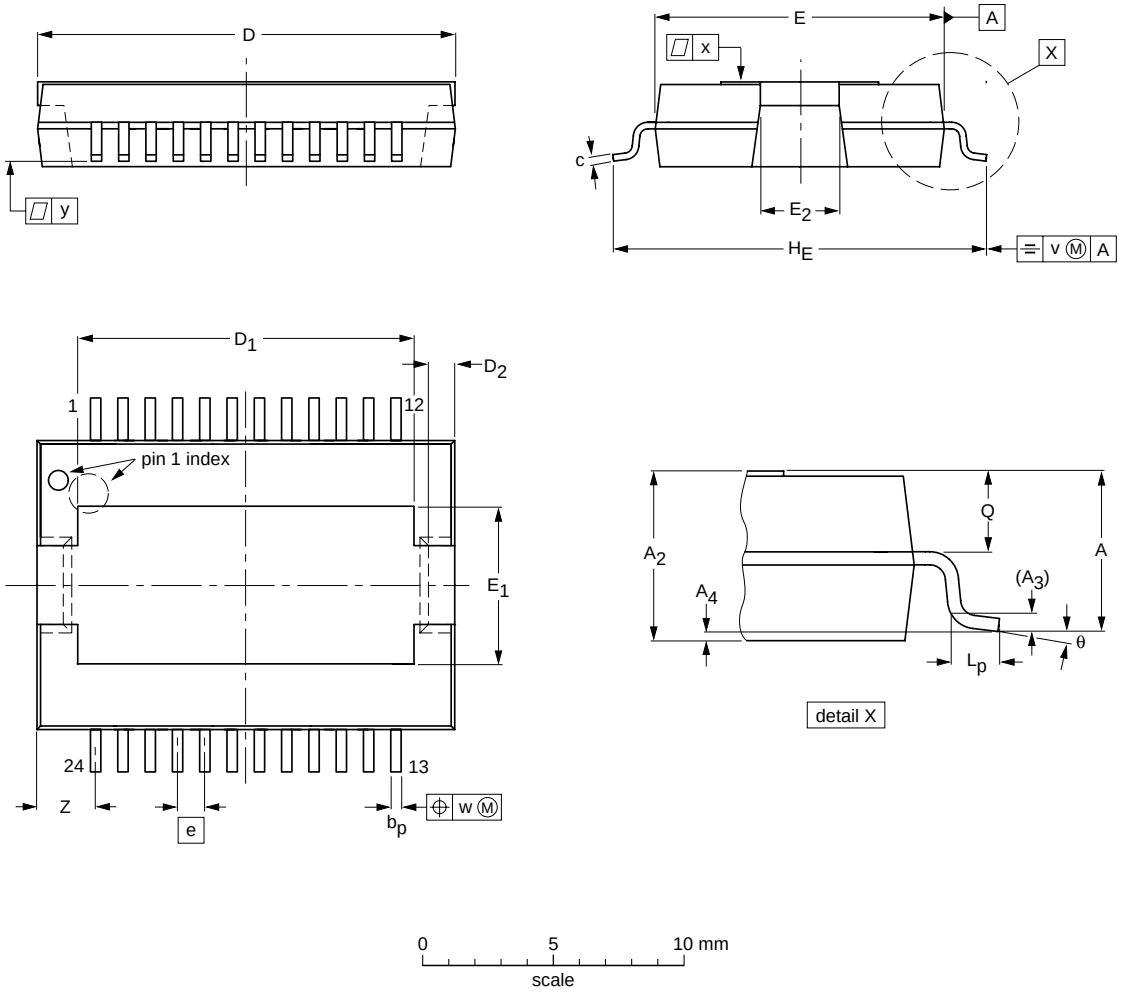

DIMENSIONS (mm are the original dimensions)

UNIT	A max.	A_2	A_3	A_4(1)	b_p	c	D(2)	D_1	D_2	E(2)	E_1	E_2	e	H_E	L_p	Q	v	w	x	y	Z	θ
mm	3.5	3.5 3.2	0.35	+0.08 −0.04	0.53 0.40	0.32 0.23	16.0 15.8	13.0 12.6	1.1 0.9	11.1 10.9	6.2 5.8	2.9 2.5	1	14.5 13.9	1.1 0.8	1.7 1.5	0.25	0.25	0.03	0.07	2.7 2.2	8° 0°

Notes

1. Limits per individual lead.
2. Plastic or metal protrusions of 0.25 mm maximum per side are not included.

OUTLINE VERSION	REFERENCES				EUROPEAN PROJECTION	ISSUE DATE
	IEC	JEDEC	JEITA			
SOT566-3						~~03-02-18~~ 03-07-23

Fig 29. Package outline SOT566-3 (HSOP24)

© Koninklijke Philips Electronics N.V. 2005. All rights reserved.

DBS23P: plastic DIL-bent-SIL power package; 23 leads (straight lead length 3.2 mm) **SOT411-1**

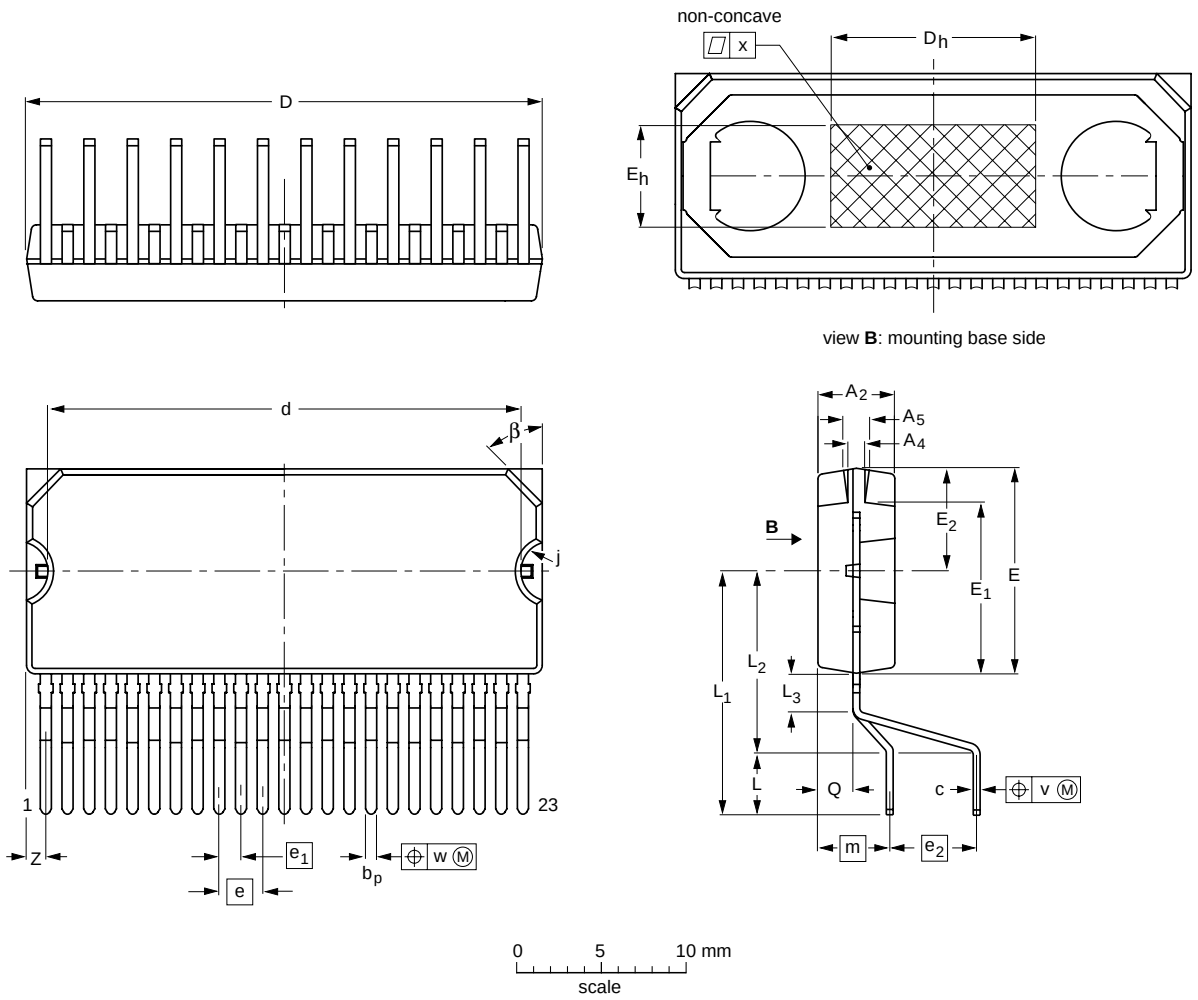

DIMENSIONS (mm are the original dimensions)

UNIT	A_2	A_4	A_5	b_p	c	D(1)	d	D_h	E(1)	e	e_1	e_2	E_h	E_1	E_2	j	L	L_1	L_2	L_3	m	Q	v	w	x	β	Z(1)
mm	4.6 4.3	1.15 0.85	1.65 1.35	0.75 0.60	0.55 0.35	30.4 29.9	28.0 27.5	12	12.2 11.8	2.54	1.27	5.08	6	10.15 9.85	6.2 5.8	1.85 1.65	3.6 2.8	14 13	10.7 9.9	2.4 1.6	4.3	2.1 1.8	0.6	0.25	0.03	45°	1.43 0.78

Note

1. Plastic or metal protrusions of 0.25 mm maximum per side are not included.

OUTLINE VERSION	REFERENCES				EUROPEAN PROJECTION	ISSUE DATE
	IEC	JEDEC	JEITA			
SOT411-1						~~98-02-20~~ 02-04-24

Fig 30. Package outline SOT411-1 (DBS23P)

© Koninklijke Philips Electronics N.V. 2005. All rights reserved.

16. Soldering

16.1 Introduction

This text gives a very brief insight to a complex technology. A more in-depth account of soldering ICs can be found in our *Data Handbook IC26; Integrated Circuit Packages* (document order number 9398 652 90011).

There is no soldering method that is ideal for all IC packages. Wave soldering is often preferred when through-hole and surface mount components are mixed on one printed-circuit board. Wave soldering can still be used for certain surface mount ICs, but it is not suitable for fine pitch SMDs. In these situations reflow soldering is recommended.

Driven by legislation and environmental forces the worldwide use of lead-free solder pastes is increasing.

16.2 Through-hole mount packages

16.2.1 Soldering by dipping or by solder wave

Typical dwell time of the leads in the wave ranges from 3 seconds to 4 seconds at 250 °C or 265 °C, depending on solder material applied, SnPb or Pb-free respectively.

The total contact time of successive solder waves must not exceed 5 seconds.

The device may be mounted up to the seating plane, but the temperature of the plastic body must not exceed the specified maximum storage temperature ($T_{stg(max)}$). If the printed-circuit board has been pre-heated, forced cooling may be necessary immediately after soldering to keep the temperature within the permissible limit.

16.2.2 Manual soldering

Apply the soldering iron (24 V or less) to the lead(s) of the package, either below the seating plane or not more than 2 mm above it. If the temperature of the soldering iron bit is less than 300 °C it may remain in contact for up to 10 seconds. If the bit temperature is between 300 °C and 400 °C, contact may be up to 5 seconds.

16.3 Surface mount packages

16.3.1 Reflow soldering

Reflow soldering requires solder paste (a suspension of fine solder particles, flux and binding agent) to be applied to the printed-circuit board by screen printing, stencilling or pressure-syringe dispensing before package placement.

Several methods exist for reflowing; for example, convection or convection/infrared heating in a conveyor type oven. Throughput times (preheating, soldering and cooling) vary between 100 seconds and 200 seconds depending on heating method.

Typical reflow peak temperatures range from 215 °C to 270 °C depending on solder paste material. The top-surface temperature of the packages should preferably be kept:

- below 225 °C (SnPb process) or below 245 °C (Pb-free process)
  - for all BGA, HTSSON..T and SSOP..T packages

© Koninklijke Philips Electronics N.V. 2005. All rights reserved.

- for packages with a thickness ≥ 2.5 mm
- for packages with a thickness < 2.5 mm and a volume ≥ 350 mm^3 so called thick/large packages.

- below 240 °C (SnPb process) or below 260 °C (Pb-free process) for packages with a thickness < 2.5 mm and a volume < 350 mm^3 so called small/thin packages.

Moisture sensitivity precautions, as indicated on packing, must be respected at all times.

16.3.2 Wave soldering

Conventional single wave soldering is not recommended for surface mount devices (SMDs) or printed-circuit boards with a high component density, as solder bridging and non-wetting can present major problems.

To overcome these problems the double-wave soldering method was specifically developed.

If wave soldering is used the following conditions must be observed for optimal results:

- Use a double-wave soldering method comprising a turbulent wave with high upward pressure followed by a smooth laminar wave.
- For packages with leads on two sides and a pitch (e):
  - larger than or equal to 1.27 mm, the footprint longitudinal axis is **preferred** to be parallel to the transport direction of the printed-circuit board;
  - smaller than 1.27 mm, the footprint longitudinal axis **must** be parallel to the transport direction of the printed-circuit board.

  The footprint must incorporate solder thieves at the downstream end.
- For packages with leads on four sides, the footprint must be placed at a 45° angle to the transport direction of the printed-circuit board. The footprint must incorporate solder thieves downstream and at the side corners.

During placement and before soldering, the package must be fixed with a droplet of adhesive. The adhesive can be applied by screen printing, pin transfer or syringe dispensing. The package can be soldered after the adhesive is cured.

Typical dwell time of the leads in the wave ranges from 3 seconds to 4 seconds at 250 °C or 265 °C, depending on solder material applied, SnPb or Pb-free respectively.

A mildly-activated flux will eliminate the need for removal of corrosive residues in most applications.

16.3.3 Manual soldering

Fix the component by first soldering two diagonally-opposite end leads. Use a low voltage (24 V or less) soldering iron applied to the flat part of the lead. Contact time must be limited to 10 seconds at up to 300 °C.

When using a dedicated tool, all other leads can be soldered in one operation within 2 seconds to 5 seconds between 270 °C and 320 °C.

© Koninklijke Philips Electronics N.V. 2005. All rights reserved.

16.4 Package related soldering information

Table 11: Suitability of IC packages for wave, reflow and dipping soldering methods

Mounting	Package [1]	Soldering method		
		Wave	Reflow [2]	Dipping
Through-hole mount	CPGA, HCPGA	suitable	–	–
	DBS, DIP, HDIP, RDBS, SDIP, SIL	suitable [3]	–	suitable
Through-hole-surface mount	PMFP [4]	not suitable	not suitable	–
Surface mount	BGA, HTSSON..T [5], LBGA, LFBGA, SQFP, SSOP..T [5], TFBGA, VFBGA, XSON	not suitable	suitable	–
	DHVQFN, HBCC, HBGA, HLQFP, HSO, HSOP, HSQFP, HSSON, HTQFP, HTSSOP, HVQFN, HVSON, SMS	not suitable [6]	suitable	–
	PLCC [7], SO, SOJ	suitable	suitable	–
	LQFP, QFP, TQFP	not recommended [7] [8]	suitable	–
	SSOP, TSSOP, VSO, VSSOP	not recommended [9]	suitable	–
	CWQCCN..L [10], WQCCN..L [10]	not suitable	not suitable	–

[1] For more detailed information on the BGA packages refer to the *(LF)BGA Application Note* (AN01026); order a copy from your Philips Semiconductors sales office.

[2] All surface mount (SMD) packages are moisture sensitive. Depending upon the moisture content, the maximum temperature (with respect to time) and body size of the package, there is a risk that internal or external package cracks may occur due to vaporization of the moisture in them (the so called popcorn effect). For details, refer to the Drypack information in the *Data Handbook IC26; Integrated Circuit Packages; Section: Packing Methods*.

[3] For SDIP packages, the longitudinal axis must be parallel to the transport direction of the printed-circuit board.

[4] Hot bar soldering or manual soldering is suitable for PMFP packages.

[5] These transparent plastic packages are extremely sensitive to reflow soldering conditions and must on no account be processed through more than one soldering cycle or subjected to infrared reflow soldering with peak temperature exceeding 217 °C ± 10 °C measured in the atmosphere of the reflow oven. The package body peak temperature must be kept as low as possible.

[6] These packages are not suitable for wave soldering. On versions with the heatsink on the bottom side, the solder cannot penetrate between the printed-circuit board and the heatsink. On versions with the heatsink on the top side, the solder might be deposited on the heatsink surface.

[7] If wave soldering is considered, then the package must be placed at a 45° angle to the solder wave direction. The package footprint must incorporate solder thieves downstream and at the side corners.

[8] Wave soldering is suitable for LQFP, QFP and TQFP packages with a pitch (e) larger than 0.8 mm; it is definitely not suitable for packages with a pitch (e) equal to or smaller than 0.65 mm.

[9] Wave soldering is suitable for SSOP, TSSOP, VSO and VSSOP packages with a pitch (e) equal to or larger than 0.65 mm; it is definitely not suitable for packages with a pitch (e) equal to or smaller than 0.5 mm.

[10] Image sensor packages in principle should not be soldered. They are mounted in sockets or delivered pre-mounted on flex foil. However, the image sensor package can be mounted by the client on a flex foil by using a hot bar soldering process. The appropriate soldering profile can be provided on request.

© Koninklijke Philips Electronics N.V. 2005. All rights reserved.

17. Revision history

Table 12: Revision history

Document ID	Release date	Data sheet status	Change notice	Doc. number	Supersedes
TDA8920B_2	20051107	Product data sheet	-	-	TDA8920B_1
Modifications:	• In Section 9 “Limiting values” the maximum value for the supply voltage is given for both operating and non operating conditions (see Table 5)				
TDA8920B_1	20041001	Preliminary data sheet	-	9397 750 13356	-

© Koninklijke Philips Electronics N.V. 2005. All rights reserved.

18. Data sheet status

Level	Data sheet status [1]	Product status [2] [3]	Definition
I	Objective data	Development	This data sheet contains data from the objective specification for product development. Philips Semiconductors reserves the right to change the specification in any manner without notice.
II	Preliminary data	Qualification	This data sheet contains data from the preliminary specification. Supplementary data will be published at a later date. Philips Semiconductors reserves the right to change the specification without notice, in order to improve the design and supply the best possible product.
III	Product data	Production	This data sheet contains data from the product specification. Philips Semiconductors reserves the right to make changes at any time in order to improve the design, manufacturing and supply. Relevant changes will be communicated via a Customer Product/Process Change Notification (CPCN).

[1] Please consult the most recently issued data sheet before initiating or completing a design.

[2] The product status of the device(s) described in this data sheet may have changed since this data sheet was published. The latest information is available on the Internet at URL http://www.semiconductors.philips.com.

[3] For data sheets describing multiple type numbers, the highest-level product status determines the data sheet status.

19. Definitions

Short-form specification — The data in a short-form specification is extracted from a full data sheet with the same type number and title. For detailed information see the relevant data sheet or data handbook.

Limiting values definition — Limiting values given are in accordance with the Absolute Maximum Rating System (IEC 60134). Stress above one or more of the limiting values may cause permanent damage to the device. These are stress ratings only and operation of the device at these or at any other conditions above those given in the Characteristics sections of the specification is not implied. Exposure to limiting values for extended periods may affect device reliability.

Application information — Applications that are described herein for any of these products are for illustrative purposes only. Philips Semiconductors make no representation or warranty that such applications will be suitable for the specified use without further testing or modification.

20. Disclaimers

Life support — These products are not designed for use in life support appliances, devices, or systems where malfunction of these products can reasonably be expected to result in personal injury. Philips Semiconductors customers using or selling these products for use in such applications do so at their own risk and agree to fully indemnify Philips Semiconductors for any damages resulting from such application.

Right to make changes — Philips Semiconductors reserves the right to make changes in the products - including circuits, standard cells, and/or software - described or contained herein in order to improve design and/or performance. When the product is in full production (status 'Production'), relevant changes will be communicated via a Customer Product/Process Change Notification (CPCN). Philips Semiconductors assumes no responsibility or liability for the use of any of these products, conveys no license or title under any patent, copyright, or mask work right to these products, and makes no representations or warranties that these products are free from patent, copyright, or mask work right infringement, unless otherwise specified.

21. Trademarks

Notice — All referenced brands, product names, service names and trademarks are the property of their respective owners.

22. Contact information

For additional information, please visit: **http://www.semiconductors.philips.com**

For sales office addresses, send an email to: **sales.addresses@www.semiconductors.philips.com**

© Koninklijke Philips Electronics N.V. 2005. All rights reserved.

23. Contents

1 General description . . . 1
2 Features . . . 1
3 Applications . . . 1
4 Quick reference data . . . 2
5 Ordering information . . . 2
6 Block diagram . . . 3
7 Pinning information . . . 4
7.1 Pinning . . . 4
7.2 Pin description . . . 4
8 Functional description . . . 5
8.1 General . . . 5
8.2 Pulse width modulation frequency . . . 8
8.3 Protections . . . 8
8.3.1 OverTemperature Protection (OTP) . . . 8
8.3.2 OverCurrent Protection (OCP) . . . 8
8.3.3 Window Protection (WP) . . . 9
8.3.4 Supply voltage protections . . . 10
8.4 Differential audio inputs . . . 11
9 Limiting values . . . 11
10 Thermal characteristics . . . 12
11 Static characteristics . . . 12
12 Dynamic characteristics . . . 13
12.1 Switching characteristics . . . 13
12.2 Stereo and dual SE application . . . 14
12.3 Mono BTL application . . . 15
13 Application information . . . 15
13.1 BTL application . . . 15
13.2 MODE pin . . . 16
13.3 Output power estimation . . . 16
13.4 External clock . . . 16
13.5 Heatsink requirements . . . 17
13.6 Output current limiting . . . 18
13.7 Pumping effects . . . 19
13.8 Application schematic . . . 20
13.9 Curves measured in reference design . . . 22
14 Test information . . . 26
14.1 Quality information . . . 26
15 Package outline . . . 27
16 Soldering . . . 29
16.1 Introduction . . . 29
16.2 Through-hole mount packages . . . 29
16.2.1 Soldering by dipping or by solder wave . . . 29
16.2.2 Manual soldering . . . 29
16.3 Surface mount packages . . . 29
16.3.1 Reflow soldering . . . 29
16.3.2 Wave soldering . . . 30
16.3.3 Manual soldering . . . 30
16.4 Package related soldering information . . . 31
17 Revision history . . . 32
18 Data sheet status . . . 33
19 Definitions . . . 33
20 Disclaimers . . . 33
21 Trademarks . . . 33
22 Contact information . . . 33

© Koninklijke Philips Electronics N.V. 2005

All rights are reserved. Reproduction in whole or in part is prohibited without the prior written consent of the copyright owner. The information presented in this document does not form part of any quotation or contract, is believed to be accurate and reliable and may be changed without notice. No liability will be accepted by the publisher for any consequence of its use. Publication thereof does not convey nor imply any license under patent- or other industrial or intellectual property rights.

Date of release: 07 November 2005
Document number: TDA8920B_2

Published in The Netherlands