NB3N2304NZ

3.3V 1:4 Clock Fanout Buffer

ON Semiconductor®

http://onsemi.com

Description

The NB3N2304NZ is a low skew 1−to 4 clock fanout buffer, designed for high speed clock distribution such as in PCI−X applications. The NB3N2304NZ guarantees low output−to−output skew. Optimal design, layout and processing minimizes skew within a device and from device−to−device.

The Output Enable (OE) pin forces the outputs LOW when LOW.

Features

- Input/Output Clock Frequency up to 140 MHz
- Low Skew Outputs (100 ps)
- Output Enable
- Operating Range: V_{DD} = 3.0 V to 3.6 V
- Ideal for PCI−X and networking clocks
- Packaged in 8−pin TSSOP, 4.4 mm x 3 mm
- Industrial Temperature Range
- These are Pb−Free Devices*

MARKING DIAGRAM*

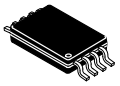

TSSOP−8
DT SUFFIX
CASE 948S

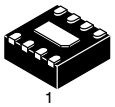

DFN8
MN SUFFIX
CASE 506AA

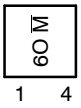

A = Assembly Location
Y = Year
WW = Work Week
M = Date Code
▪ = Pb−Free Package

*For additional marking information, refer to Application Note AND8002/D.

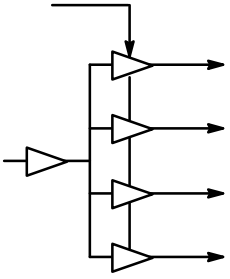

Figure 1. Simplified Logic Diagram

ORDERING INFORMATION

See detailed ordering and shipping information in the package dimensions section on page 5 of this data sheet.

*For additional information on our Pb−Free strategy and soldering details, please download the ON Semiconductor Soldering and Mounting Techniques Reference Manual, SOLDERRM/D.

© Semiconductor Components Industries, LLC, 2009

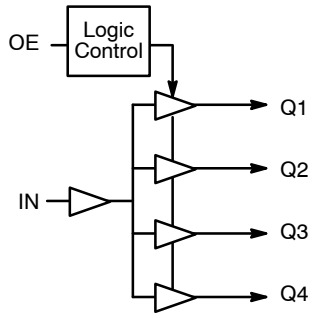

Figure 2. Block Diagram

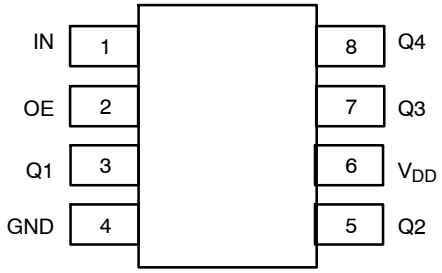

Figure 3. NB3N2304NZ Package Pinout (Top View)

Table 1. PIN DESCRIPTION

Pin #	Pin Name	Type	Description
1	IN	LVCMOS/LVTTL Input	Clock Input
2	OE	LVCMOS/LVTTL Input	Output Enable for the clock outputs. Outputs are enabled when forced HIGH. Outputs are forced to logic LOW when OE is forced LOW.
3	Q1	LVCMOS/LVTTL Output	Clock Output 1
4	GND	Power	Negative Supply Voltage; Connect to Ground, 0 V
5	Q2	(LV)CMOS/(LV)TTL Input	Clock Output 2
6	V_{DD}	Power	Positive Supply Voltage (3.0 V to 3.6 V)
7	Q3	(LV)CMOS/(LV)TTL Output	Clock Output 3
8	Q4	(LV)CMOS/(LV)TTL Input	Clock Output 4
–	EP	Thermal Exposed Pad	(DFN8 only) Thermal exposed pad must be connected to a sufficient thermal conduit. Electrically connect to the most negative supply (GND) or leave unconnected, floating open.

Table 2. OE, OUTPUT ENABLE FUNCTION TABLE

Inputs		Outputs
IN	**OE**	
L	L	L
H	L	L
L	H	L
H	H	H

Table 3. ATTRIBUTES

Characteristics		Value
ESD Protection	Human Body Model Machine Model	> 2kV > 200 V
Moisture Sensitivity, Indefinite Time Out of Drypack (Note 1) TSSOP−8 DFN−8		 Level 3 Level 1
Flammability Rating	Oxygen Index: 28 to 34	UL 94 V−O @ 0.125 in
Transistor Count		480 Devices
Meets or exceeds JEDEC Spec EIA/JESD78 IC Latchup Test		

1. For additional information, see Application Note AND8003/D.

Table 4. MAXIMUM RATINGS

Symbol	Parameter	Condition 1	Condition 2	Rating	Unit
V_{DD}	Positive Power Supply	GND = 0 V		V_{DD} + 0.5V	V
V_I	Input Voltage			GND − 0.5 ≤ V_I ≤ V_{DD} + 0.5	V
T_A	Operating Temperature Range, Industrial			≥ −40 to ≤ +85	°C
T_{stg}	Storage Temperature Range			−65 to +150	°C
θ_{JA}	Thermal Resistance (Junction−to−Ambient)	0 lfpm 500 lfpm 0 lfpm 500 lfpm	TSSOP−8 TSSOP−8 DFN−8 DFN−8	143 103 129 84	°C/W
T_{SOL}	Wave Solder Pb−Free	(Note 2)		265	°C
θ_{JC}	Thermal Resistance (Junction−to−Case)	(Note 2)	DFN8	35 to 40	°C/W

Stresses exceeding Maximum Ratings may damage the device. Maximum Ratings are stress ratings only. Functional operation above the Recommended Operating Conditions is not implied. Extended exposure to stresses above the Recommended Operating Conditions may affect device reliability.

2. JEDEC standard multilayer board − 2S2P (2 signal, 2 power)

Table 5. DC CHARACTERISTICS V_{DD} = 3.0 V to 3.6 V, GND = 0 V, T_A = −40°C to +85°C

Symbol	Characteristic	Min	Typ	Max	Unit
I_{DD}	Power Supply Current @ 66.66 MHz, Unloaded Outputs		12	25	mA
V_{OH}	Output HIGH Voltage − IOH = −24 mA −IOH = −12 mA	2.0 2.4			V
V_{OL}	Output LOW Voltage −IOL = 24 mA −IOL = 12 mA			0.8 0.55	V
V_{IH}	Input HIGH Voltage, IN and OE (Note 3)	2.0			V
V_{IL}	Input LOW Voltage, IN and OE (Note 3)			0.8	V
I_{IH}	Input HIGH Current, $V_{IN} = V_{DD}$	−50		50	μA
I_{IL}	Input LOW Current, V_{IN} = 0 V	−100		100	μA
CIN	Input Capacitance, IN, OE		5	7	pF

NOTE: Device will meet the specifications after thermal equilibrium has been established when mounted in a test socket or printed circuit board with maintained transverse airflow greater than 500 lfpm. Electrical parameters are guaranteed only over the declared operating temperature range. Functional operation of the device exceeding these conditions is not implied. Device specification limit values are applied individually under normal operating conditions and not valid simultaneously.

3. IN input has a threshold voltage of $V_{DD}/2$.

Table 6. AC CHARACTERISTICS V_{DD} = 3.0 V to 3.6 V, GND = 0 V, T_A = −40°C to +85°C (Note 4) (Figure 4)

Symbol	Characteristic	Min	Typ	Max	Unit
f_{in}	Input Clock Frequency	DC		140	MHz
t_{DCskew}	Duty Cycle Skew = t2 ÷ t1 (Figure 4) Measured at 1.5 V	40	50	60	%
tr/tf	Output Rise and Fall Times; 0.8 V to 2.0 V C_L = 25 pF C_L = 10 pF		0.9 0.6	1.5	ns
t_{pd}	Propagation Delay, IN−to−Qn (Note 5)	2.5	3.5	5	ns
t_{skew}	Output−to−Output Skew; (Note 5)			100	ps
t_{pu}	Powerup Time for V_{DD} to Reach Minimum Specified Voltage	0.05		50	ms

NOTE: Device will meet the specifications after thermal equilibrium has been established when mounted in a test socket or printed circuit board with maintained transverse airflow greater than 500 lfpm. Electrical parameters are guaranteed only over the declared operating temperature range. Functional operation of the device exceeding these conditions is not implied. Device specification limit values are applied individually under normal operating conditions and not valid simultaneously.

4. All outputs loaded equally with C_L = 25 pF to GND. Duty cycle out = duty in. A 0.01 μF decoupling capacitor should be connected between V_{DD} and GND.
5. Measured on rising edges at V_{DD} ÷ 2; all outputs with equal loading.

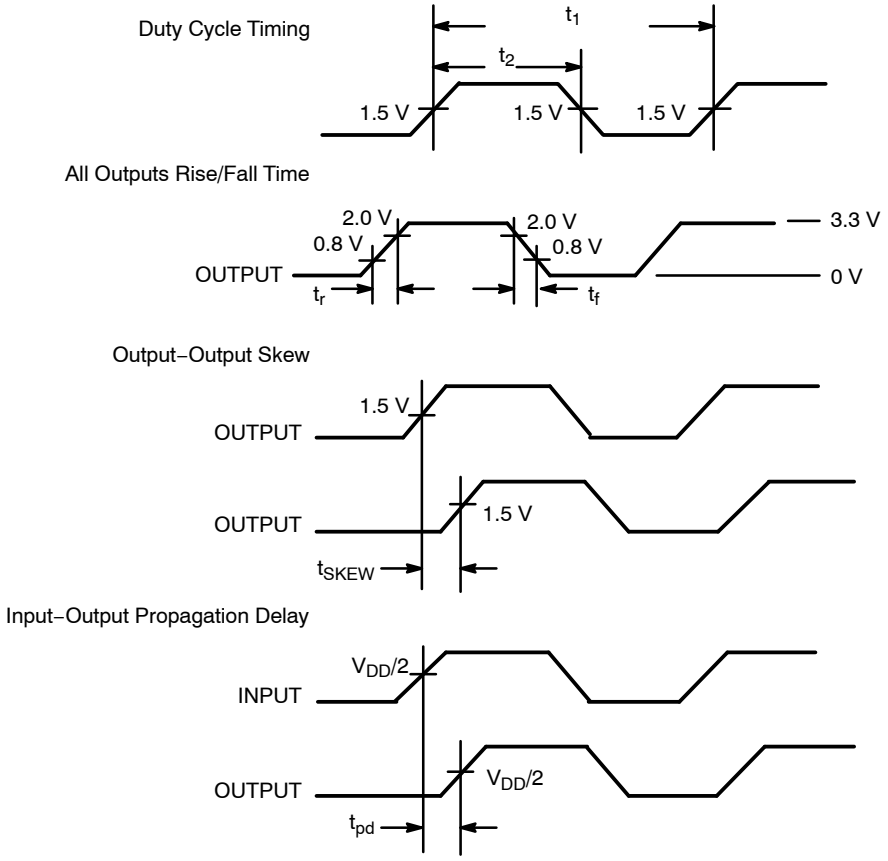

Figure 4. Switching Waveforms

ORDERING INFORMATION

Device	Package	Shipping†
NB3N2304NZDTG	TSSOP−8 (Pb−Free)	100 Units / Rail
NB3N2304NZDTR2G	TSSOP−8 (Pb−Free)	2500 / Tape & Reel
NB3N2304NZMNR4G*	DFN8 (Pb−Free)	1000 / Tape & Reel

†For information on tape and reel specifications, including part orientation and tape sizes, please refer to our Tape and Reel Packaging Specifications Brochure, BRD8011/D.
*Contact a sales representative.

PACKAGE DIMENSIONS

TSSOP−8
CASE 948S−01
ISSUE C

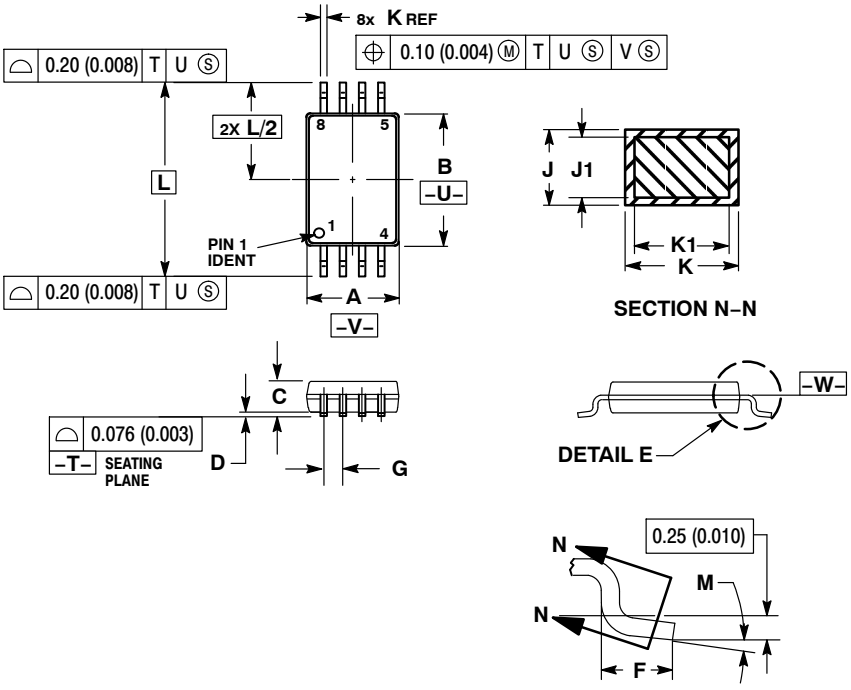

NOTES:
1. DIMENSIONING AND TOLERANCING PER ANSI Y14.5M, 1982.
2. CONTROLLING DIMENSION: MILLIMETER.
3. DIMENSION A DOES NOT INCLUDE MOLD FLASH. PROTRUSIONS OR GATE BURRS. MOLD FLASH OR GATE BURRS SHALL NOT EXCEED 0.15 (0.006) PER SIDE.
4. DIMENSION B DOES NOT INCLUDE INTERLEAD FLASH OR PROTRUSION. INTERLEAD FLASH OR PROTRUSION SHALL NOT EXCEED 0.25 (0.010) PER SIDE.
5. TERMINAL NUMBERS ARE SHOWN FOR REFERENCE ONLY.
6. DIMENSION A AND B ARE TO BE DETERMINED AT DATUM PLANE −W−.

	MILLIMETERS		INCHES	
DIM	MIN	MAX	MIN	MAX
A	2.90	3.10	0.114	0.122
B	4.30	4.50	0.169	0.177
C	---	1.10	---	0.043
D	0.05	0.15	0.002	0.006
F	0.50	0.70	0.020	0.028
G	0.65 BSC		0.026 BSC	
J	0.09	0.20	0.004	0.008
J1	0.09	0.16	0.004	0.006
K	0.19	0.30	0.007	0.012
K1	0.19	0.25	0.007	0.010
L	6.40 BSC		0.252 BSC	
M	0°	8°	0°	8°

PACKAGE DIMENSIONS

DFN8
CASE 506AA−01
ISSUE D

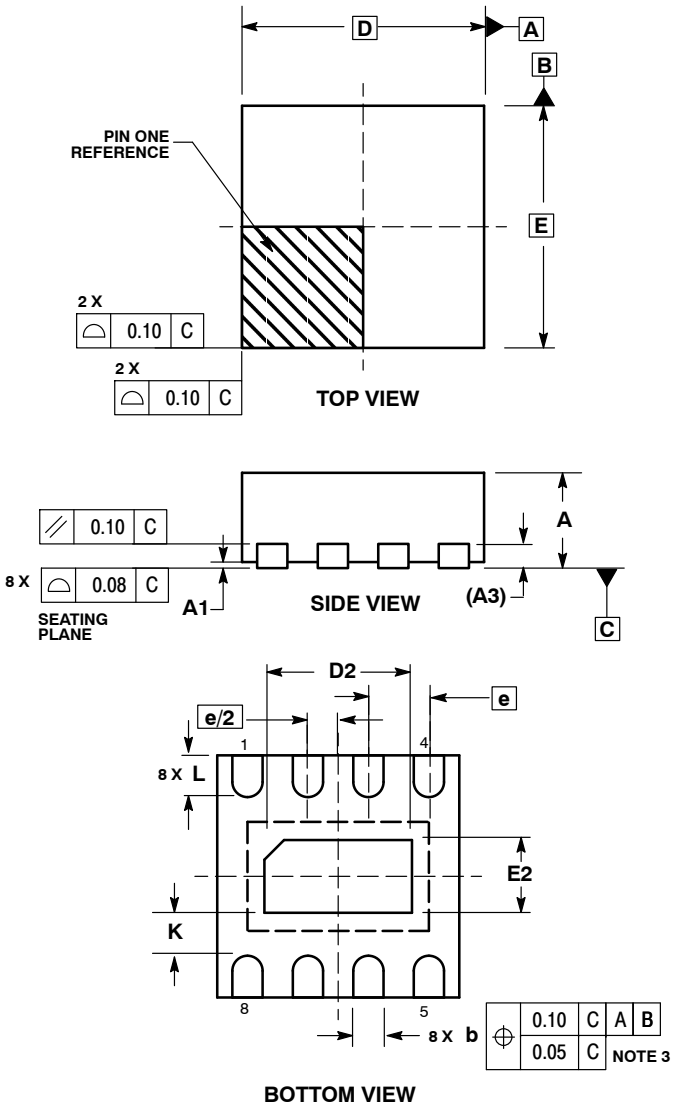

NOTES:
1. DIMENSIONING AND TOLERANCING PER ASME Y14.5M, 1994 .
2. CONTROLLING DIMENSION: MILLIMETERS.
3. DIMENSION b APPLIES TO PLATED TERMINAL AND IS MEASURED BETWEEN 0.25 AND 0.30 MM FROM TERMINAL.
4. COPLANARITY APPLIES TO THE EXPOSED PAD AS WELL AS THE TERMINALS.

	MILLIMETERS	
DIM	MIN	MAX
A	0.80	1.00
A1	0.00	0.05
A3	0.20 REF	
b	0.20	0.30
D	2.00 BSC	
D2	1.10	1.30
E	2.00 BSC	
E2	0.70	0.90
e	0.50 BSC	
K	0.20	−−−
L	0.25	0.35

ON Semiconductor and ON are registered trademarks of Semiconductor Components Industries, LLC (SCILLC). SCILLC reserves the right to make changes without further notice to any products herein. SCILLC makes no warranty, representation or guarantee regarding the suitability of its products for any particular purpose, nor does SCILLC assume any liability arising out of the application or use of any product or circuit, and specifically disclaims any and all liability, including without limitation special, consequential or incidental damages. “Typical” parameters which may be provided in SCILLC data sheets and/or specifications can and do vary in different applications and actual performance may vary over time. All operating parameters, including “Typicals” must be validated for each customer application by customer’s technical experts. SCILLC does not convey any license under its patent rights nor the rights of others. SCILLC products are not designed, intended, or authorized for use as components in systems intended for surgical implant into the body, or other applications intended to support or sustain life, or for any other application in which the failure of the SCILLC product could create a situation where personal injury or death may occur. Should Buyer purchase or use SCILLC products for any such unintended or unauthorized application, Buyer shall indemnify and hold SCILLC and its officers, employees, subsidiaries, affiliates, and distributors harmless against all claims, costs, damages, and expenses, and reasonable attorney fees arising out of, directly or indirectly, any claim of personal injury or death associated with such unintended or unauthorized use, even if such claim alleges that SCILLC was negligent regarding the design or manufacture of the part. SCILLC is an Equal Opportunity/Affirmative Action Employer. This literature is subject to all applicable copyright laws and is not for resale in any manner.

PUBLICATION ORDERING INFORMATION

LITERATURE FULFILLMENT:
Literature Distribution Center for ON Semiconductor
P.O. Box 5163, Denver, Colorado 80217 USA
Phone: 303−675−2175 or 800−344−3860 Toll Free USA/Canada
Fax: 303−675−2176 or 800−344−3867 Toll Free USA/Canada
Email: orderlit@onsemi.com

N. American Technical Support: 800−282−9855 Toll Free USA/Canada
Europe, Middle East and Africa Technical Support:
Phone: 421 33 790 2910
Japan Customer Focus Center
Phone: 81−3−5773−3850

ON Semiconductor Website: **www.onsemi.com**

Order Literature: http://www.onsemi.com/orderlit

For additional information, please contact your local Sales Representative