POWDER COATED GREY RAL7001 SMOOTH GLOSS
486-220-01A
POWDER COATED BLACK RAL9001 SMOOTH GLOSS
486-220-01E

220 X 120 X 80

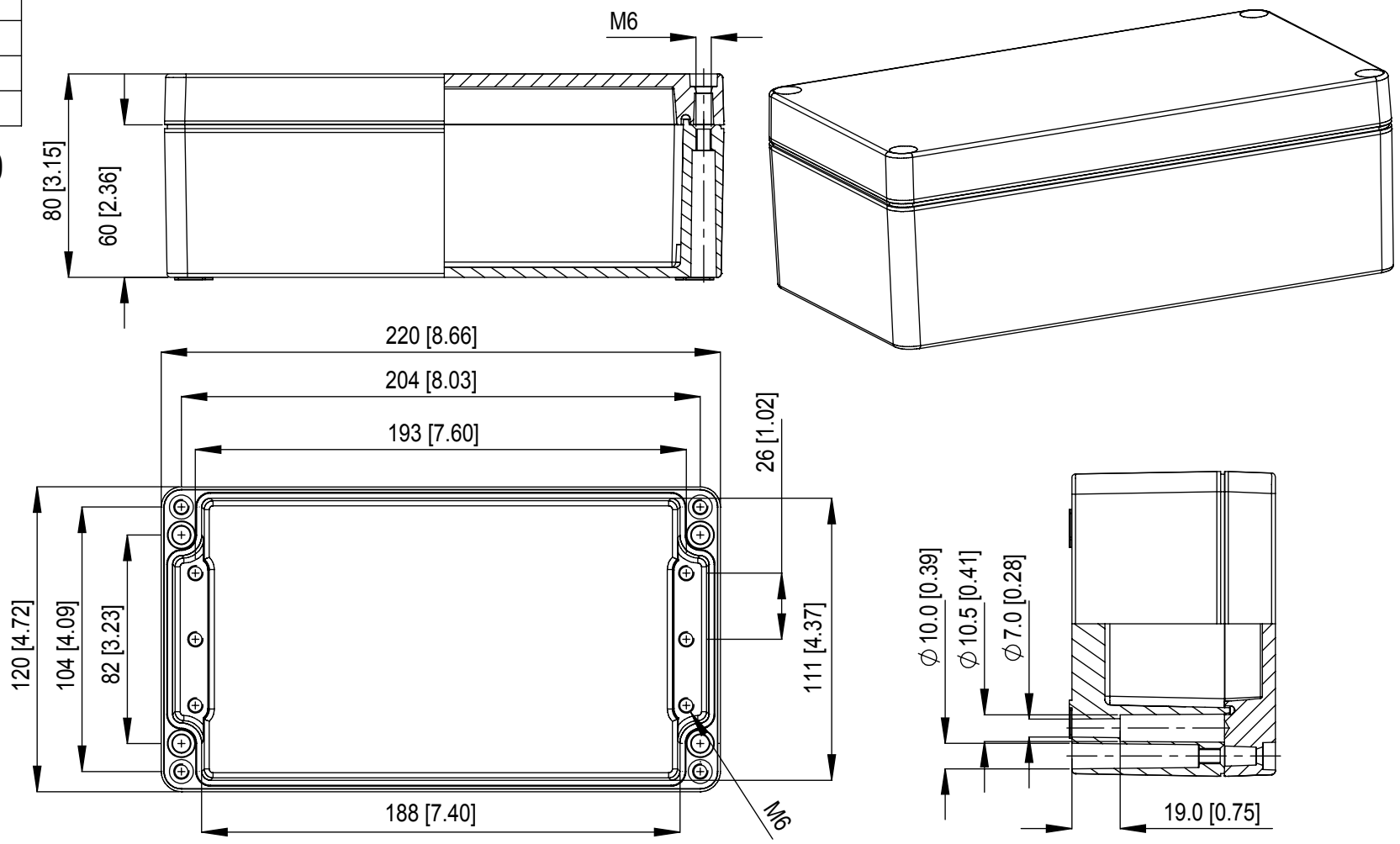

Tel No. +44(0)1724 273200 Website www.dem-uk.com

PROPRIETARY AND CONFIDENTIAL
THE INFORMATION CONTAINED IN THIS DRAWING IS THE SOLE PROPERTY OF ALPHA 3 MANUFACTURING.
ANY REPRODUCTION IN PART OR AS A WHOLE WITHOUT THE WRITTEN PERMISSION OF ALPHA 3 MANUFACTURING IS PROHIBITED.

DEM Manufacturing, Deltron Emcon House
Hargreaves Way, Sawcliffe Ind. Park,
Scunthorpe, North Lincolnshire, DN15 8RF, UK

UNLESS OTHERWISE SPECIFIED:
DIMENSIONS ARE IN MILLIMETRES
LINEAR TOLERANCE:
NO DECIMAL PLACES ±0.5mm
1 DECIMAL PLACE ±0.25mm
2 DECIMAL PLACES ±0.125mm
ANGULAR TOLERANCE: ±1°

FINISH	AS REQUESTED	DEBURR AND BREAK SHARP EDGES	
	-		
	-		
IF IN DOUBT ASK DO NOT SCALE DRAWING			
MATERIAL	LM6		

DRAWN BY	SPB
APPROVED BY	WC
THIRD ANGLE PROJECTION	SHEET 1 OF 1
	SCALE 1:2.5
	A4

TITLE: HEAVY DUTY IP68 SEALED ENCLOSURE

DRAWING NO. 486-220-01

ISSUE **01** Release