Customer Information Sheet

DRAWING No.: M80-4S1XXXXFJ-00-000-00-000	SHT 2 OF 2	IF IN DOUBT - ASK	©	NOT TO SCALE	THIRD ANGLE PROJECTION	ALL DIMENSIONS IN mm

SPECIFICATIONS:
- MATERIAL:
  - MOULDING = GLASS-FILLED PPS, UL94V-0, BLACK
  - CONTACT CLIP = BERYLLIUM COPPER
  - CONTACT SHELL = BRASS
  - JACKSCREW & NUT = STAINLESS STEEL
- FINISH:
  - 01 = 0.3µ GOLD CLIP, 3.5-5.0µ TIN/LEAD SHELL
  - 05 = 0.3µ GOLD CLIP, 0.25-0.3µ GOLD SHELL
  - 42 = 0.3µ GOLD CLIP, 3.5-5.0µ 100% TIN OVER NICKEL SHELL
- ELECTRICAL:
  - CURRENT RATING AT 25°C = 3.0A MAX
  - CURRENT RATING AT 85°C = 2.2A MAX
  - WORKING VOLTAGE = 120V AC/DC
  - VOLTAGE PROOF = 360V AC/DC
  - CONTACT RESISTANCE = 25 mΩ MAX
  - INSULATION RESISTANCE = 100 MΩ MIN
- MECHANICAL:
  - DURABILITY = 500 OPERATIONS
  - INSERTION FORCE (Ø0.5mm GAUGE) = 2.8N MAX
  - WITHDRAWAL FORCE (Ø0.5mm GAUGE) = 0.2N MIN
- ENVIRONMENTAL:
  - TEMPERATURE RANGE = -55°C TO +125°C
- PACKING:
  - TUBE

FOR COMPLETE SPECIFICATION, SEE COMPONENT SPEC C005XX (LATEST ISSUE)

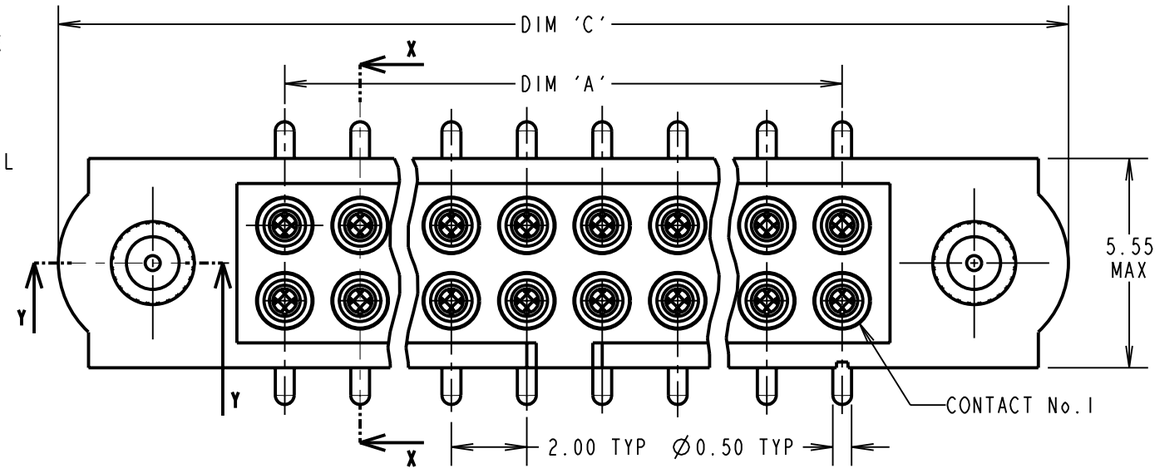

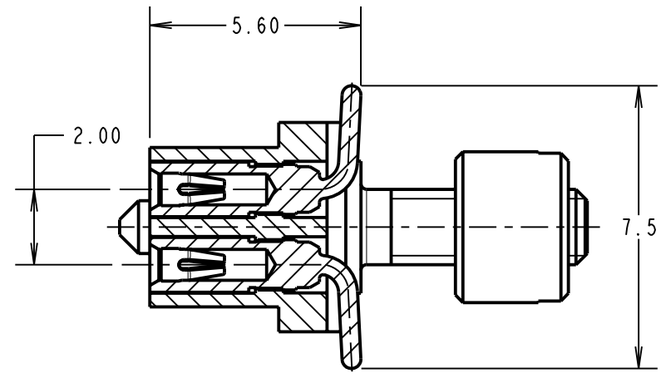

SECTION X-X

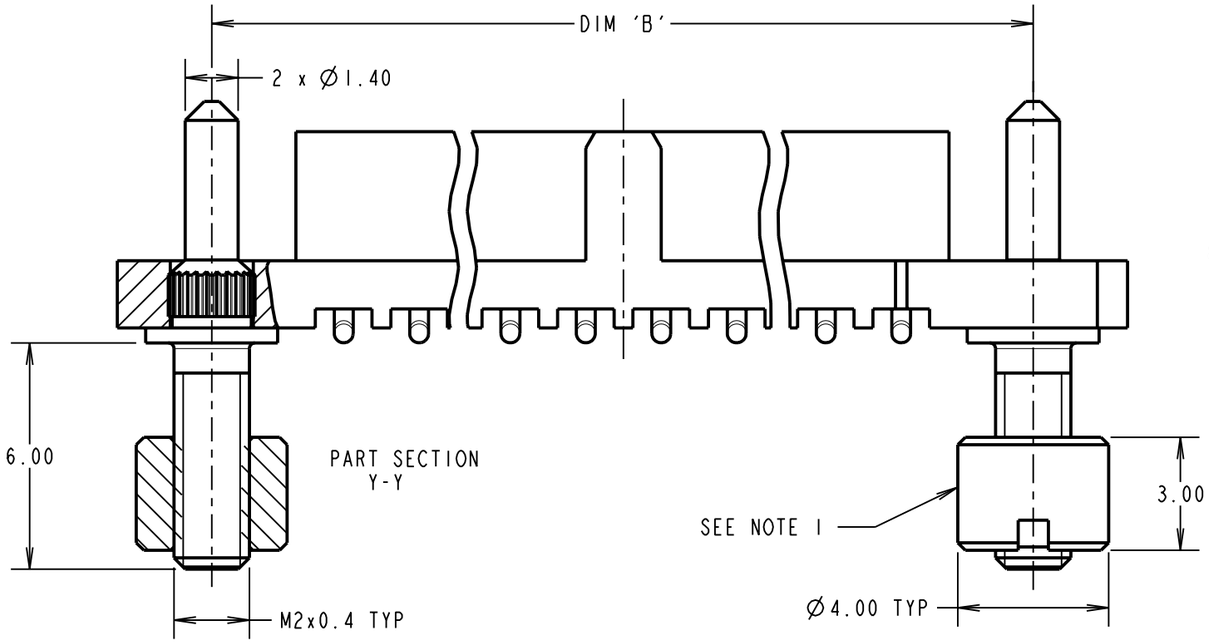

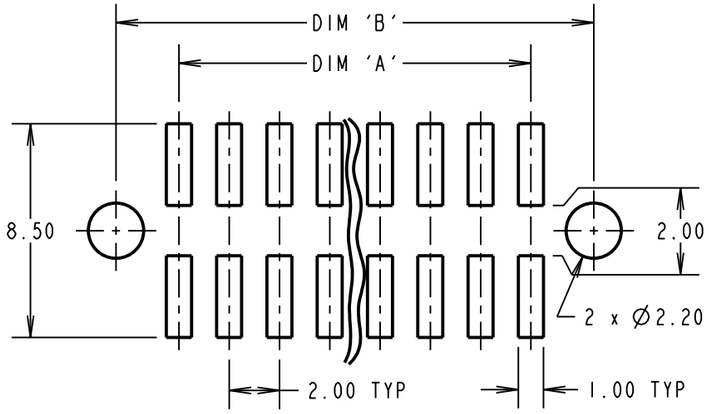

RECOMMENDED PCB LAYOUT

NOTES:
1. BOARD MOUNTING NUT SUPPLIED LOOSE. NOT ASSEMBLED AS SHOWN.

DIMENSION	CALCULATION
DIM 'A'	TOTAL No. OF CONTACTS - 2
DIM 'B'	TOTAL No. OF CONTACTS + 5
DIM 'C'	TOTAL No. OF CONTACTS + 10
EXAMPLE: CONNECTOR WITH 20 CONTACTS, GOLD CLIP AND 100% TIN OVER NICKEL SHELL, M80-4S12042FJ-00-000-00-000	
DIM 'A' = 18.00mm, DIM 'B' = 25.00mm, DIM 'C' = 30.00mm	

ORDER CODE:

M80-4S1XXXXFJ-00-000-00-000

TOTAL No. OF CONTACTS
- 04 TO 50
- (EVEN NUMBERS ONLY)

FINISH
- 01 - GOLD CLIP, TIN/LEAD SHELL
- 05 - GOLD CLIP, GOLD SHELL
- 42 - GOLD CLIP, 100% TIN OVER NICKEL SHELL

NAME	ISS.	DATE	C/NOTE
CP	1	02.09.10	10870

APPROVED: C.PENROSE
CHECKED: R.ADDE
DRAWN: MARK G PLESTED
CUSTOMER REF.:
ASSEMBLY DRG:

HARWIN

HARWIN USA
TEL: 603 893 5376
FAX: 603 893 5396
mis@harwin.com

HARWIN Europe (UK)
TEL: 023 9231 4545
FAX: 023 9231 4590
mis@harwin.co.uk

HARWIN Asia
TEL: +65 6 779 4909
FAX: +65 6 779 3868
mis@harwin.com.sg

THIS DRAWING AND ANY INFORMATION OR DESCRIPTIVE MATTER SET OUT HEREON ARE CONFIDENTIAL AND COPYRIGHT PROPERTY OF THE HARWIN GROUP AND MUST NOT BE DISCLOSED, LOANED, COPIED OR USED FOR MANUFACTURING, TENDERING OR FOR ANY OTHER PURPOSE WITHOUT THEIR WRITTEN PERMISSION.

TOLERANCES
- X. = ±1mm
- X.X = ±0.25mm
- X.XX = ±0.10mm
- X.XXX = ±0.01mm
- ANGLES = 2±5°
- UNLESS STATED

MATERIAL: SEE ABOVE
FINISH: SEE ABOVE
S/AREA: mm²

TITLE: DATAMATE J-TEK DIL VERTICAL SMT FEMALE ASSY WITH JACKSCREW BOARD MOUNT

DRAWING NUMBER: M80-4S1XXXXFJ-00-000-00-000

SHT 2 OF 2