QUADRUPLE 3-STATE BUFFERS

Description

The 74LVC126A provides four independent buffers with three state outputs. Each output is independently controlled by an associated output enable pin (OE) which places the device in the high impedance state when driven low. The device is designed for operation with a power supply range of 1.65V to 5.5V. The inputs are tolerant to 5.5V allowing this device to be used in a mixed voltage environment. The device is fully specified for partial power down applications using IOFF. The IOFF circuitry disables the output preventing damaging current backflow when the device is powered down.

Features

- Supply Voltage Range from 1.65V to 5.5V
- Sinks 24mA at V_{CC} = 3.3V
- CMOS low power consumption
- IOFF Supports Partial-Power-Down Mode Operation
- Inputs or outputs accept up to 5.5V
- Inputs can be driven by 3.3V or 5.5V allowing for voltage translation applications.
- ESD Protection Exceeds JESD 22
  - 200-V Machine Model (A115-A)
  - 2000-V Human Body Model (A114-A)
  - Exceeds 1000-V Charged Device Model (C101C)
- Latch-Up Exceeds 250mA per JESD 78, Class II
- Range of Package Options SO-14 and TSSOP-14
- **Totally Lead-Free & Fully RoHS Compliant (Notes 1 & 2)**
- **Halogen and Antimony Free. “Green” Device (Note 3)**

Pin Assignments

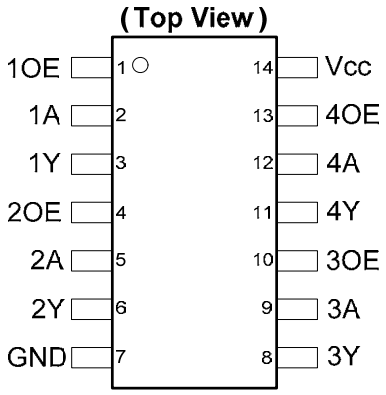

SO-14 / TSSOP-14

Applications

- Voltage Level Shifting
- General Purpose Logic
- Power Down Signal Isolation
- Wide array of products such as:
  - PCs, networking, notebooks, ultrabooks, netbooks
  - Computer peripherals, hard drives, CD/DVD ROM
  - TV, DVD, DVR, set top box

Notes:
1. No purposely added lead. Fully EU Directive 2002/95/EC (RoHS) & 2011/65/EU (RoHS 2) compliant.
2. See http://www.diodes.com for more information about Diodes Incorporated’s definitions of Halogen- and Antimony-free, "Green" and Lead-free.
3. Halogen- and Antimony-free "Green” products are defined as those which contain <900ppm bromine, <900ppm chlorine (<1500ppm total Br + Cl) and <1000ppm antimony compounds.

© Diodes Incorporated

Pin Descriptions

Pin Number	Pin Name	Description
1	1OE	Data Enable Input (active high)
2	1A	Data Input
3	1Y	Data Output
4	2OE	Data Enable Input (active high)
5	2A	Data Input
6	2Y	Data Output
7	GND	Ground
8	3Y	Data Output
9	3A	Data Input
10	3OE	Data Enable Input (active high)
11	4Y	Data Output
12	4A	Data Input
13	4OE	Data Enable Input (active high)
14	V_{CC}	Supply Voltage

Logic Diagram

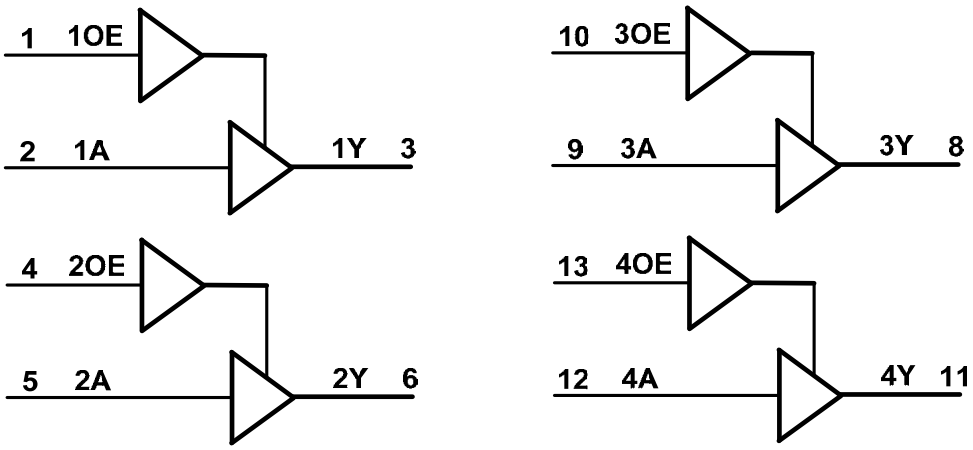

Function Table

Inputs		Output
OE	A	Y
H	H	H
H	L	L
L	X	Z

© Diodes Incorporated

Absolute Maximum Ratings (Note 4) (@T_A = +25℃, unless otherwise specified.)

Symbol	Description	Rating	Unit
ESD HBM	Human Body Model ESD Protection	2	KV
ESD CDM	Charged Device Model ESD Protection	1	KV
ESD MM	Machine Model ESD Protection	200	V
V_{CC}	Supply Voltage Range	-0.5 to +6.5	V
V_I	Input Voltage Range	-0.5 to +6.5	V
V_O	Voltage applied to output in high impedance or I_{OFF} state	-0.5 to +6.5	V
V_O	Voltage applied to output in high or low state	-0.3 to V_{CC} +0.5	V
I_{IK}	Input Clamp Current V_I <0	-50	mA
I_{OK}	Output Clamp Current V_O <0	-50	mA
I_O	Continuous output current	±50	mA
I_{CC},, I_{GND}	Continuous current through V_{CC} or GND	±100	mA
T_J	Operating Junction Temperature	-40 to +150	℃
T_{STG}	Storage Temperature	-65 to +150	℃
P_{TOT}	Total Power Dissipation	500	mW

Note: 4. Stresses beyond the absolute maximum may result in immediate failure or reduced reliability. These are stress values and device operation should be within recommend values.

Recommended Operating Conditions (Note 5) (@T_A = +25℃, unless otherwise specified.)

Symbol	Parameter	Conditions	Min	Max	Unit
V_{CC}	Supply Voltage		1.65	5.50	V
V_I	Input Voltage		0	5.5	V
V_O	Output Voltage	Active Mode	0	V_{CC}	V
		V_{CC} = 0V; Power Down Mode	0	5.5	V
Δt/ΔV	Input transition rise or fall rate	V_{CC} = 1.65V to 2.7V		20	ns/V
		V_{CC} = 2.7V to 3.6V		10	
T_A	Operating free-air temperature		-40	+125	ºC

Note: 5. Unused inputs should be held at V_{CC} or Ground.

© Diodes Incorporated

Electrical Characteristics (@T_A = +25℃, unless otherwise specified.)

Symbol	Parameter	Test Conditions	V_{CC}	T_A = -40℃ to +85℃		T_A = -40℃ to +125℃		Unit
				Min	Max	Min	Max	
V_{IH}	High-level Input Voltage		1.65V to 1.95V	0.65 X V_{CC}		0.65 X V_{CC}		V
			2.3V to 2.7V	1.7		1.6		
			2.7V to 3.6V	2.0		2.0		
V_{IL}	Low-level input voltage		1.65V to 1.95V		0.35 X V_{CC}		0.35 X V_{CC}	V
			2.3V to 2.7V		0.7		0.7	
			2.7V to 3.6V		0.8		0.8	
V_{OH}	High Level Output Voltage	I_{OH} = -100μA	1.65V to 3.6V	V_{CC} – 0.2		V_{CC} – 0.3		V
		I_{OH} = -4mA	1.65V	1.2				
		I_{OH} = -8mA	2.3V	1.9				
		I_{OH} = -12mA	2.7V	2.2		2.05		
			3.0V	2.3		2.1		
		I_{OH} = -24mA	3.0V	2.2		2.0		
V_{OL}	High-level Output Voltage	I_{OH} = 100μA	1.65V to 3.6V		0.2		0.3	V
		I_{OH} = 4mA	1.65V		0.45		0.6	
		I_{OH} = 8mA	2.3V		0.70		0.85	
		I_{OH} = 12mA	2.7V		0.40		0.6	
			3.0V		0.55		0.6	
		I_{OH} =-24mA	3.0V		0.55		0.6	
I_I	Input Current	V_I =GND to 5.5V	3.6V		± 5		± 20	μA
I_{OZ}	Z State Leakage Current	V_O = GND or 5.5V	3.6V		± 10		± 20	μA
I_{OFF}	Power Down Leakage Current	V_I or V_O = 0V to 3.6V	0		10		20	μA
I_{CC}	Supply Current	V_I = GND or V_{CC} I_O=0	3.6V		10		40	μA
ΔI_{CC}	Additional Supply Current	One input at V_{CC} –0.6V Other	2.7V to 3.6V		500		5000	μA

© Diodes Incorporated

Switching Characteristics

Parameter	From (Input)	To (Output)	Test Conditions See Figure 1	T_A = +25°C			-40°C to +85°C		-40°C to +125°C		Unit
				Min	Typ	Max	Min	Max	Min	Max	
t_{pd}	A	Y	Vcc = 1.8V ± 0.15V	1.0	4.2	9.3	1.0	9.8	1.0	11.3	ns
			Vcc = 2.5V ± 0.2V	1.0	2.7	6.7	1.0	7.2	1.0	9.3	
			Vcc = 2.7V	1.0	2.9	5.0	1.0	5.2	1.0	6.5	
			Vcc = 3.3V ± 0.3V	1.0	2.5	4.5	1.0	4.7	1.0	6.0	
t_{en}	OE	Y	Vcc = 1.8V ± 0.15V	1.0	4.8	9.5	1.0	10	1.0	11.5	ns
			Vcc = 2.5V ± 0.2V	1.0	2.1	7.8	1.0	8.3	1.0	10.4	
			Vcc = 2.7V	1.0	2.3	6.1	1.0	6.3	1.0	8.0	
			Vcc = 3.3V ± 0.3V	1.0	2.5	5.5	1.0	5.7	1.0	7.5	
t_{dis}	OE	Y	Vcc = 1.8 V ± 0.15V	1.0	4.4	12.1	1.0	12.5	1.0	14.1	ns
			Vcc = 2.5V ± 0.2V	1.0	2.7	8.2	1.0	8.7	1.0	10.8	
			Vcc = 2.7V	1.0	2.7	6.5	1.0	6.7	1.0	8.5	
			Vcc = 3.3V ± 0.3V	1.0	2.3	5.8	1.0	6.0	1.0	7.5	
$t_{SK(0)}$			Vcc = 3.3V ± 0.3V			1.0		1.0		1.5	ns

Operating Characteristics (@T_A = +25°C, unless otherwise specified.)

Parameter		Test Conditions	V_{CC} = 1.8V	V_{CC} = 2.5V	V_{CC} = 3.3V	Unit
			Typ	Typ	Typ	
C_{pd}	Power dissipation capacitance per gate	f = 10 MHz	7.3	11.2	14.9	pF
C_I	Input Capacitance	V_i = V_{CC} – or GND	4	4	4	pF

Package Characteristics

Symbol	Parameter	Test Conditions	V_{CC}	Min	Typ	Max	Unit
θ_{JA}	Thermal Resistance Junction-to-Ambient	SO-14	(Note 6)		TBD		°C/W
		TSSOP-14			159		
θ_{JC}	Thermal Resistance Junction-to-Case	SO-14	(Note 6)		TBD		°C/W
		TSSOP-14			25		

Note: 6. Test condition for SO-14 and TSSOP-14: Device mounted on FR-4 substrate PC board, 2oz copper, with minimum recommended pad layout.

© Diodes Incorporated

Parameter Measuement Information

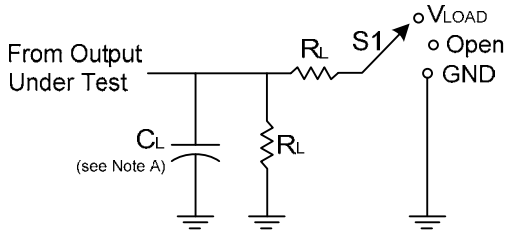

TEST	S1
t_{PLH}/t_{PHL}	Open
t_{PLZ}/t_{PZL}	VLOAD
t_{PHZ}/t_{PZH}	GND

V_{CC}	Inputs		V_M	V_{LOAD}	C_L	R_L	$V\Delta$
	V_I	t_r/t_f					
1.8V±0.15V	V_{CC}	≤2ns	$V_{CC}/2$	2 x V_{CC}	30pF	1KΩ	0.15V
2.5V±0.2V	V_{CC}	≤2ns	$V_{CC}/2$	2 x V_{CC}	30pF	500Ω	0.15V
2.7V	2.7V	≤2.5ns	1.5V	6V	50pF	500Ω	0.3V
3.3V±0.3V	2.7V	≤2.5ns	1.5V	6V	50pF	500Ω	0.3V

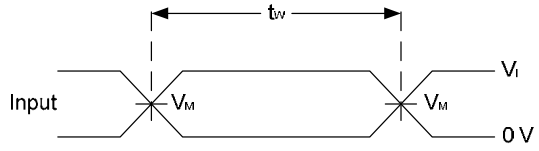

Voltage Waveform Pulse Duration

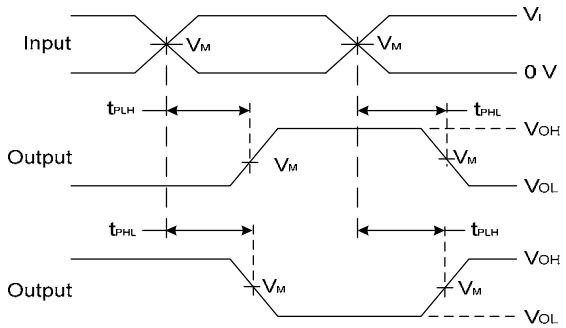

Voltage Waveform Propagation Delay Times
Inverting and Non Inverting Outputs

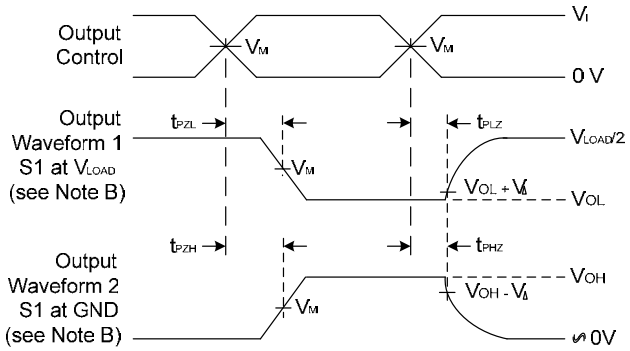

Voltage Waveform Enable and Disable Times
Low and High Level Enabling

Notes: A. Includes test lead and test apparatus capacitance.
B. All pulses are supplied at pulse repetition rate ≤ 10 MHz.
C. Inputs are measured separately one transition per measurement.
D. t_{PLZ} and t_{PHZ} are the same as $t_{dis.}$
E. t_{PZL} and t_{PZH} are the same as t_{EN0}
F. t_{PLH} and t_{PHL} are the same as $t_{PD.}$

Figure 1. Load Circuit and Voltage Waveforms

© Diodes Incorporated

Ordering Information

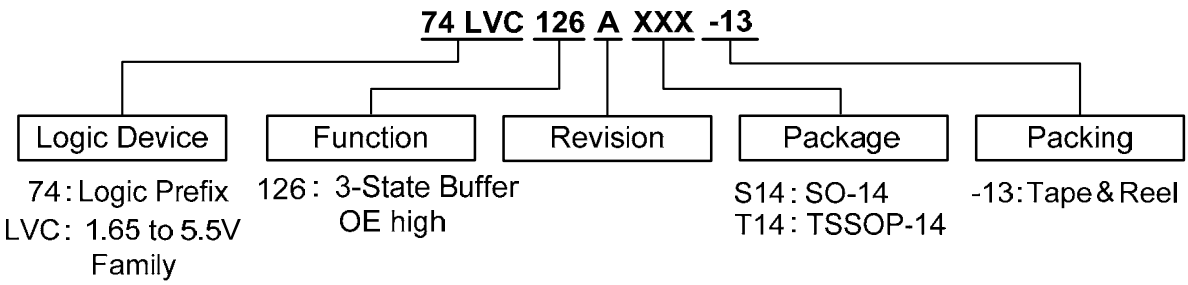

Device	Package Code	Packaging (Note 5)	13" Tape and Reel	
			Quantity	Part Number Suffix
74LVC126AS14-13	S14	SO-14	2500/Tape & Reel	-13
74LVC126AT14-13	T14	TSSOP-14	2500/Tape & Reel	-13

Notes: 7. The taping orientation and tape details can be found at http://www.diodes.com/datasheets/ap02007.pdf

Marking Information

(1) SO-14, TSSOP-14

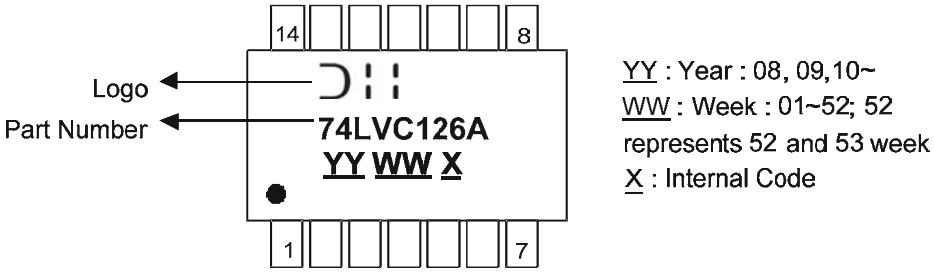

Part Number	Package
74LVC126AS14	SO-14
74LVC126AT14	TSSOP-14

© Diodes Incorporated

Package Outline Dimensions (All dimensions in mm.)

Package Type: SO-14

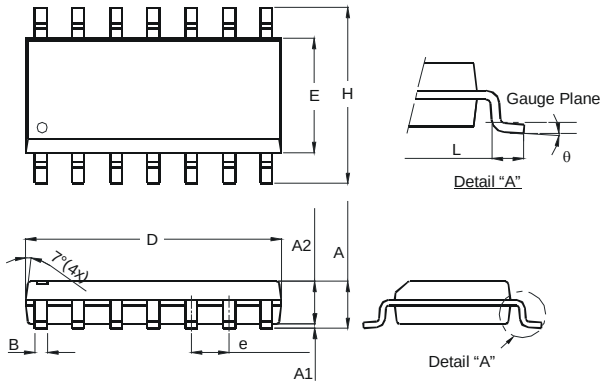

SO-14		
Dim	**Min**	**Max**
A	1.47	1.73
A1	0.10	0.25
A2	1.45 Typ	
B	0.33	0.51
D	8.53	8.74
E	3.80	3.99
e	1.27 Typ	
H	5.80	6.20
L	0.38	1.27
θ	0°	8°
All Dimensions in mm		

Package Type: TSSOP-14

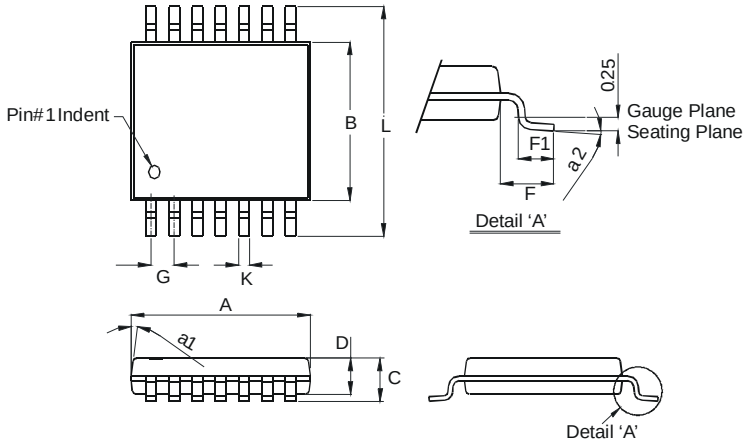

TSSOP-14		
Dim	**Min**	**Max**
a1	7°(4X)	
a2	0°	8°
A	4.9	5.10
B	4.30	4.50
C	—	1.2
D	0.8	1.05
F	1.00 Typ	
F1	0.45	0.75
G	0.65 Typ	
K	0.19	0.30
L	6.40 Typ	
All Dimensions in mm		

© Diodes Incorporated

Suggested Pad Layout

Package Type: SO-14

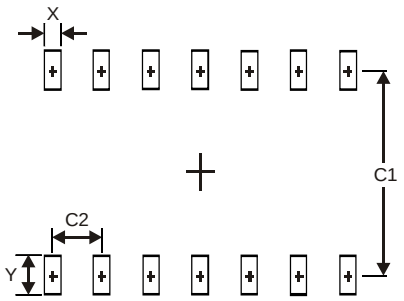

Dimensions	Value (in mm)
X	0.60
Y	1.50
C1	5.4
C2	1.27

Package Type: TSSOP-14

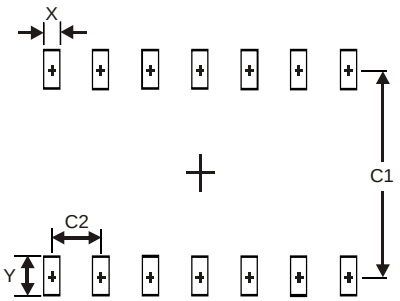

Dimensions	Value (in mm)
X	0.45
Y	1.45
C1	5.9
C2	0.65

© Diodes Incorporated

IMPORTANT NOTICE

DIODES INCORPORATED MAKES NO WARRANTY OF ANY KIND, EXPRESS OR IMPLIED, WITH REGARDS TO THIS DOCUMENT, INCLUDING, BUT NOT LIMITED TO, THE IMPLIED WARRANTIES OF MERCHANTABILITY AND FITNESS FOR A PARTICULAR PURPOSE (AND THEIR EQUIVALENTS UNDER THE LAWS OF ANY JURISDICTION).

Diodes Incorporated and its subsidiaries reserve the right to make modifications, enhancements, improvements, corrections or other changes without further notice to this document and any product described herein. Diodes Incorporated does not assume any liability arising out of the application or use of this document or any product described herein; neither does Diodes Incorporated convey any license under its patent or trademark rights, nor the rights of others. Any Customer or user of this document or products described herein in such applications shall assume all risks of such use and will agree to hold Diodes Incorporated and all the companies whose products are represented on Diodes Incorporated website, harmless against all damages.

Diodes Incorporated does not warrant or accept any liability whatsoever in respect of any products purchased through unauthorized sales channel. Should Customers purchase or use Diodes Incorporated products for any unintended or unauthorized application, Customers shall indemnify and hold Diodes Incorporated and its representatives harmless against all claims, damages, expenses, and attorney fees arising out of, directly or indirectly, any claim of personal injury or death associated with such unintended or unauthorized application.

Products described herein may be covered by one or more United States, international or foreign patents pending. Product names and markings noted herein may also be covered by one or more United States, international or foreign trademarks.

LIFE SUPPORT

Diodes Incorporated products are specifically not authorized for use as critical components in life support devices or systems without the express written approval of the Chief Executive Officer of Diodes Incorporated. As used herein:

A. Life support devices or systems are devices or systems which:

1. are intended to implant into the body, or

2. support or sustain life and whose failure to perform when properly used in accordance with instructions for use provided in the labeling can be reasonably expected to result in significant injury to the user.

B. A critical component is any component in a life support device or system whose failure to perform can be reasonably expected to cause the failure of the life support device or to affect its safety or effectiveness.

Customers represent that they have all necessary expertise in the safety and regulatory ramifications of their life support devices or systems, and acknowledge and agree that they are solely responsible for all legal, regulatory and safety-related requirements concerning their products and any use of Diodes Incorporated products in such safety-critical, life support devices or systems, notwithstanding any devices- or systems-related information or support that may be provided by Diodes Incorporated. Further, Customers must fully indemnify Diodes Incorporated and its representatives against any damages arising out of the use of Diodes Incorporated products in such safety-critical, life support devices or systems.

Copyright © 2012, Diodes Incorporated

www.diodes.com