MS 2000 SIGNAL ROTARY SWITCH

GENERAL ELECTRICAL & MECHANICAL SPECIFICATION

RoHS COMPLIANT

Switch Rating:	20mA @ 24V DC
Life:	50,000 Cycles
Operating Temp:	-25°C to +85°C
Proof Voltage:	2.5KV (Initial)
Insulation Resistance:	>999 MΩ @ 500V DC (Initial)
Contact Resistance:	<20 mΩ (Initial)
Contact Gap:	3mm
Switch Contacts:	Ag CdO + Au plated
Switch Chamber:	Polyamide 6.6 G.F. V0 Rated
Tag Panel:	SRBP
Terminals:	Brass CZ108 Ag Plated

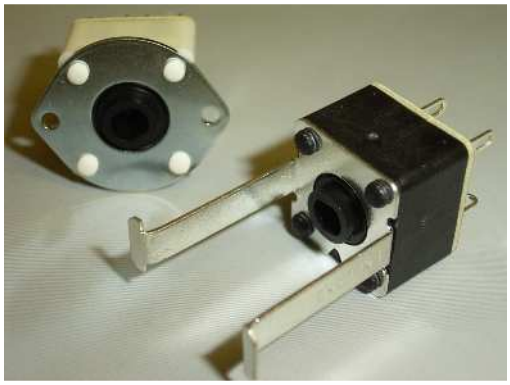

2 POLE OFF- ON (NORMALLY OPEN)		
	PLATE	BRACKET
ORDERING CODE		MS2211 90º SOL
	MS2215 90° SOL	

2 POLE CHANGEOVER		
	PLATE	BRACKET
ORDERING CODE		MS2212 90º SOL
	MS2214 90° SOL	

STANDARD SWITCH DETAIL

MOUNTING BRACKET

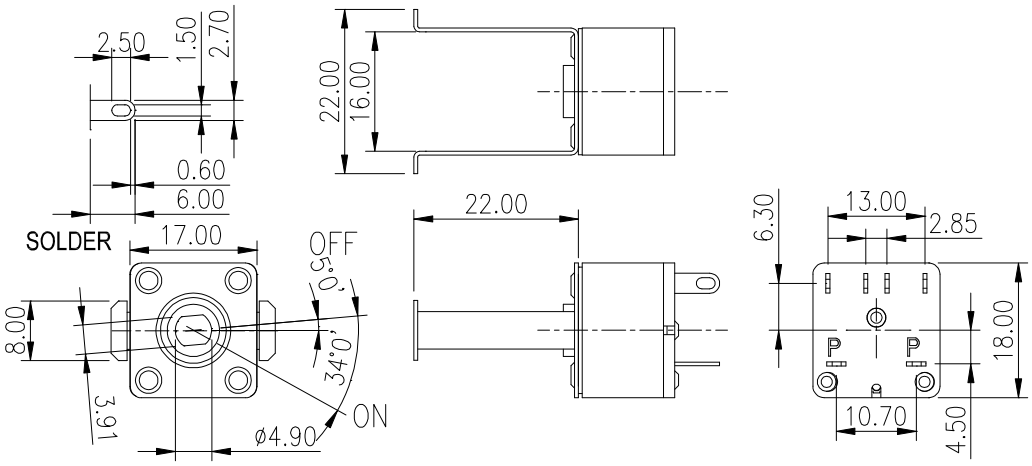

Orientation in OFF–Position
ie Fully anti–Clockwise

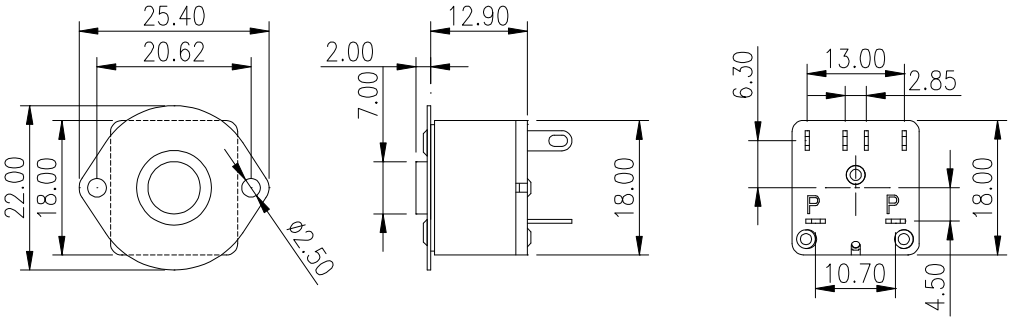

MOUNTING PLATE

Lorlin Electronics Ltd, Harwood Industrial Estate, Harwood Rd, Littlehampton, W. Sussex BN17 7AT England
Tel (+44) 01903 725121 Fax (+44) 01903 726808 E-mail sales@lorlin.co.uk