REV	ECN. NO.	APP	DATE
A	EDIÇÃO INICIAL		
B	**NOVO CÓDIGO**		

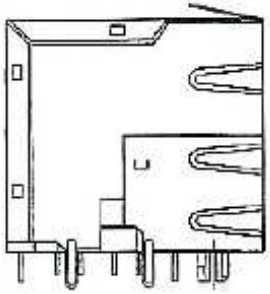

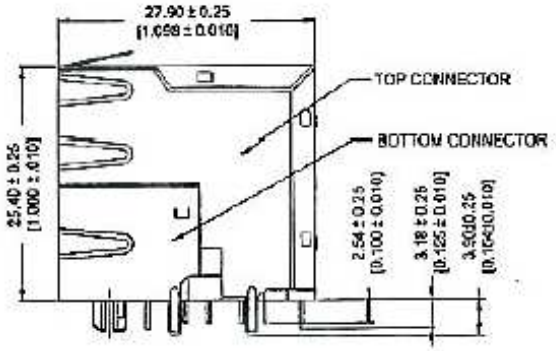

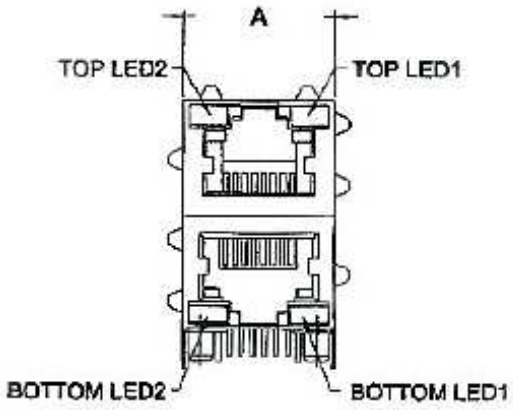

Port	2X1	2X2	2X3	2X4	2X6	2X8
A	18.45	32.10	47.85	63.75	95.10	126.60
B	12.70	20.44	44.19	58.94	91.44	122.94
C	18.26	32.00	47.74	63.50	95.00	126.50

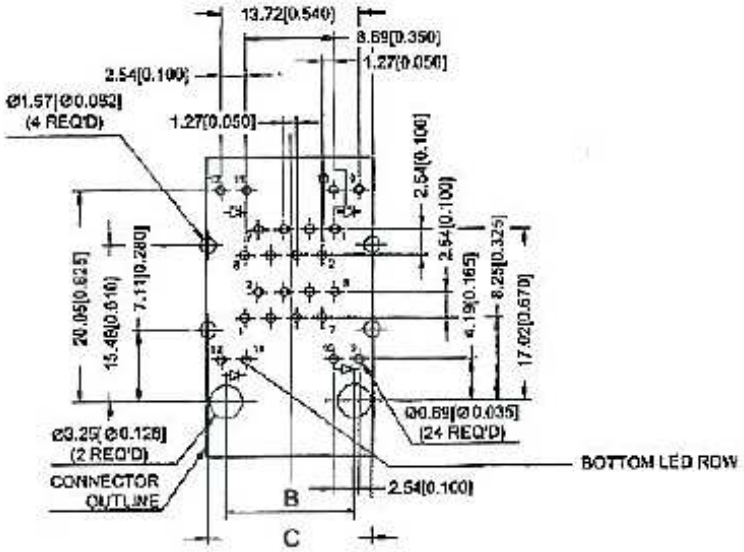

SUGGESTED PCB LAYOUT

HOW TO ORDER:
2002[8P8C][ ][Y][ ]74R
1 2 3 4

1- No. Contact
(8P8C)-RJ45

2- Contact Plating:
( )-Gold 6U"
(15)-Gold 15U"
(30)-Gold 30U"
(50)-Gold 50U"

3- Body Option:
(Y)-With Fully Shielded

4- Stack Option:
(2)-2 Jacks 2x1
(4)-4 Jacks 2x2
(6)-6 Jacks 2x3
(8)-8 Jacks 2x4
(12)-12 Jacks 2x6
(16)-16 Jacks 2x8

MATRIX Tecnologia Ind. e Com. Ltda.

UNIT mm	SCALE	TITLE	DATE DECEMBER 2009
TOLERANCE: ±0.25		Stacked RJ45 Jack W/Led	APP. BY
		MATL	CHK. BY
		DWG. NO.	DR. BY Felipe