HIGH VOLTAGE SURFACE MOUNT SWITCHING DIODE ARRAY

Features

- Two Series Diode Circuits Connect to Form Full Wave Bridge
- Fast Switching Speed
- High Conductance
- High Reverse Breakdown Voltage Rating
- **Lead Free/RoHS Compliant Version (Note 3)**
- **"Green" Device (Notes 4 and 5)**

Mechanical Data

- Case: SOT-26
- Case Material: Molded Plastic, "Green" Molding Compound, Note 5. UL Flammability Classification Rating 94V-0
- Moisture Sensitivity: Level 1 per J-STD-020D
- Terminals: Solderable per MIL-STD-202, Method 208
- Lead Free Plating (Matte Tin Finish annealed over Copper leadframe).
- Polarity: See Diagram
- Marking Information: See Page 2
- Ordering Information: See Page 2
- Weight: 0.016 grams (approximate)

SOT-26

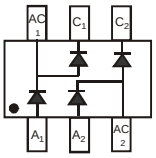

TOP VIEW
Internal Schematic

TOP VIEW

Maximum Ratings @T_A = 25°C unless otherwise specified

Characteristic	Symbol	Value	Unit
Repetitive Peak Reverse Voltage	V_{RRM}	350	V
Working Peak Reverse Voltage DC Blocking Voltage	V_{RWM} V_R	300	V
RMS Reverse Voltage	$V_{R(RMS)}$	212	V
Forward Continuous Current (Note 1)	I_F	225	mA
Peak Repetitive Forward Current (Note 1)	I_{FRM}	625	mA
Non-Repetitive Peak Forward Surge Current @ t = 1.0µs @ t = 1.0s	I_{FSM}	4.0 1.0	A

Thermal Characteristics

Characteristic	Symbol	Value	Unit
Power Dissipation (Note 1)	P_D	350	mW
Thermal Resistance Junction to Ambient Air (Note 1)	$R_{\theta JA}$	357	°C/W
Operating and Storage Temperature Range	T_J , T_{STG}	-65 to +150	°C

Electrical Characteristics @T_A = 25°C unless otherwise specified

Characteristic	Symbol	Min	Typ	Max	Unit	Test Condition
Reverse Breakdown Voltage (Note 2)	$V_{(BR)R}$	350	—	—	V	I_R = 150µA
Forward Voltage	V_F	—	0.78 0.93 1.03	0.87 1.0 1.25	V	I_F = 20mA I_F = 100mA I_F = 200mA
Reverse Current (Note 2)	I_R	—	30 35	100 100	nA µA	V_R = 240V V_R = 240V, T_J = 150°C
Total Capacitance	C_T	—	1.0	5.0	pF	V_R = 0V, f = 1.0MHz
Reverse Recovery Time	t_{rr}	—	—	50	ns	I_F = I_R = 30mA, I_{rr} = 3.0mA, R_L = 100Ω

Notes:
1. Part mounted on FR-4 board with recommended pad layout, which can be found on our website at http://www.diodes.com/datasheets/ap02001.pdf.
2. Short duration pulse test used to minimize self-heating effect.
3. No purposefully added lead.
4. Diodes Inc.'s "Green" policy can be found on our website at http://www.diodes.com/products/lead_free/index.php.
5. Product manufactured with Date Code 0627 (week 27, 2006) and newer are built with Green Molding Compound. Product manufactured prior to Date Code 0627 are built with Non-Green Molding Compound and may contain Halogens or Sb2O3 Fire Retardants.

© Diodes Incorporated

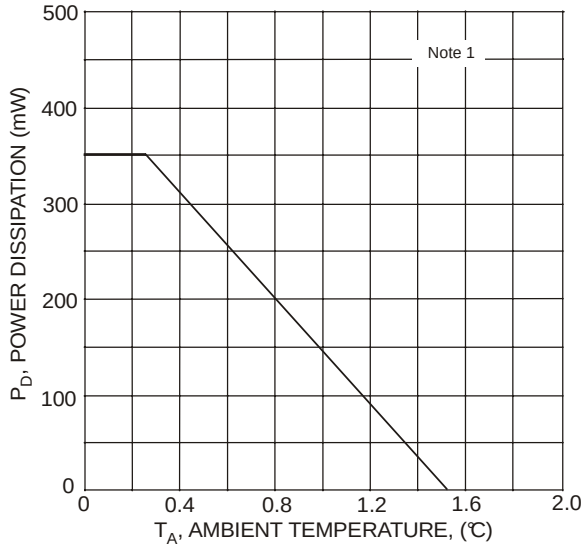

Fig. 1 Power Derating Curve, Total Package

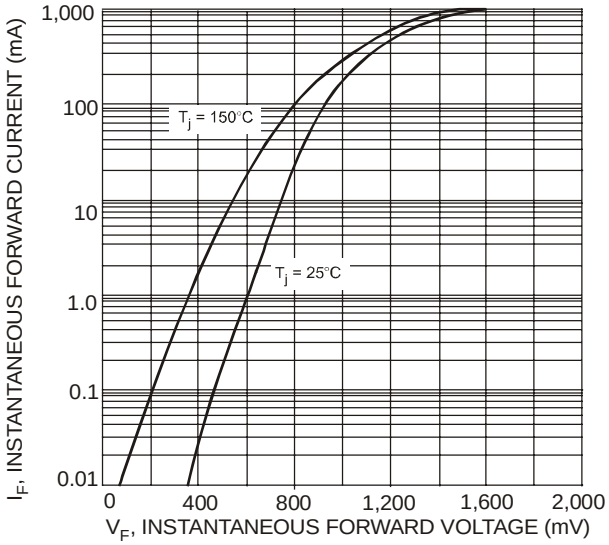

Fig. 2 Typical Forward Characteristics, Per Element

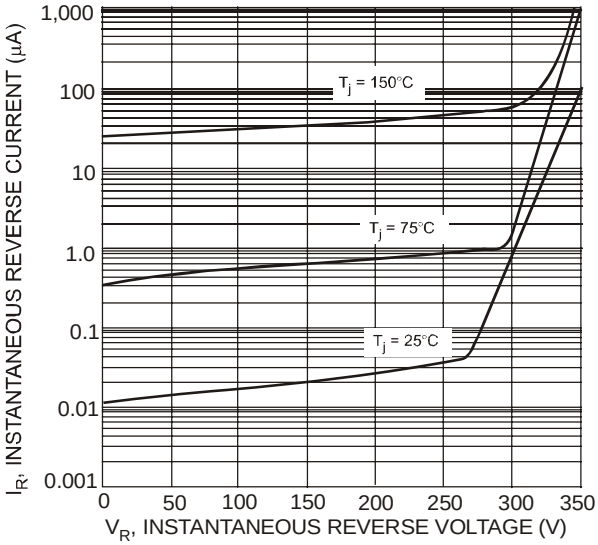

Fig. 3 Typical Reverse Characteristics, Per Element

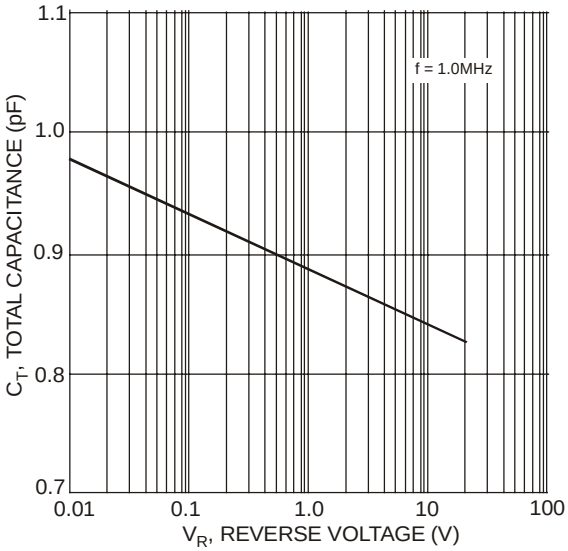

Fig. 4 Total Capacitance vs. Reverse Voltage, Per Element

Ordering Information (Notes 5 & 6)

Part Number	Case	Packaging
MMBD3004BRM-7	SOT-26	3000/Tape & Reel

Notes: 6. For packaging details, go to our website at http://www.diodes.com/datasheets/ap02007.pdf.

Marking Information

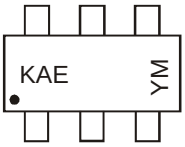

KAE = Product Type Marking Code
YM = Date Code Marking
Y =Year ex: T = 2006
M = Month ex: 9 = September

Date Code Key

Year	2006	2007	2008	2009	2010	2011	2012
Code	T	U	V	W	X	Y	Z

Month	Jan	Feb	Mar	Apr	May	Jun	Jul	Aug	Sep	Oct	Nov	Dec
Code	1	2	3	4	5	6	7	8	9	O	N	D

© Diodes Incorporated

Package Outline Dimensions

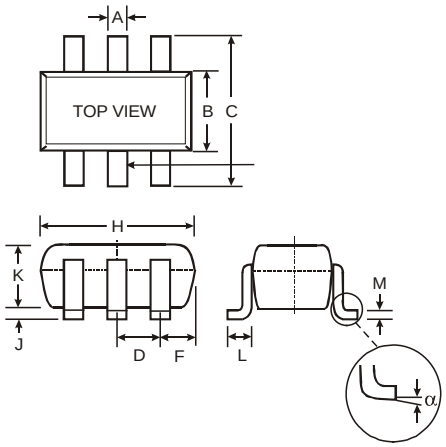

SOT-26			
Dim	**Min**	**Max**	**Typ**
A	0.35	0.50	0.38
B	1.50	1.70	1.60
C	2.70	3.00	2.80
D	—	—	0.95
F	—	—	0.55
H	2.90	3.10	3.00
J	0.013	0.10	0.05
K	1.00	1.30	1.10
L	0.35	0.55	0.40
M	0.10	0.20	0.15
α	0°	8°	—
All Dimensions in mm			

Suggested Pad Layout

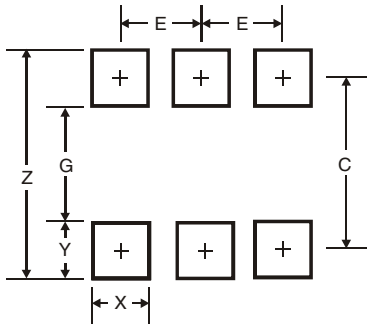

Dimensions	Value (in mm)
Z	3.20
G	1.60
X	0.55
Y	0.80
C	2.40
E	0.95

IMPORTANT NOTICE

Diodes Incorporated and its subsidiaries reserve the right to make modifications, enhancements, improvements, corrections or other changes without further notice to any product herein. Diodes Incorporated does not assume any liability arising out of the application or use of any product described herein; neither does it convey any license under its patent rights, nor the rights of others. The user of products in such applications shall assume all risks of such use and will agree to hold Diodes Incorporated and all the companies whose products are represented on our website, harmless against all damages.

LIFE SUPPORT

Diodes Incorporated products are not authorized for use as critical components in life support devices or systems without the expressed written approval of the President of Diodes Incorporated.

© Diodes Incorporated