# Type: BM27

## ◆ Product Description

・7.5×2.5 mm Max.(L×W), 8.7mm Max. Height.
・Custom design is available.

## ◆ Feature

・Low cost type.
・Using ferrite core which enables high impedance in high frequency band.
・High impedance for normal mode noise.
・Automatic mounting is possible by delivery of radial tape.
・Ideally used for data communication equipment, hard disk driver and image scanner.

## ◆ Dimensions (mm)

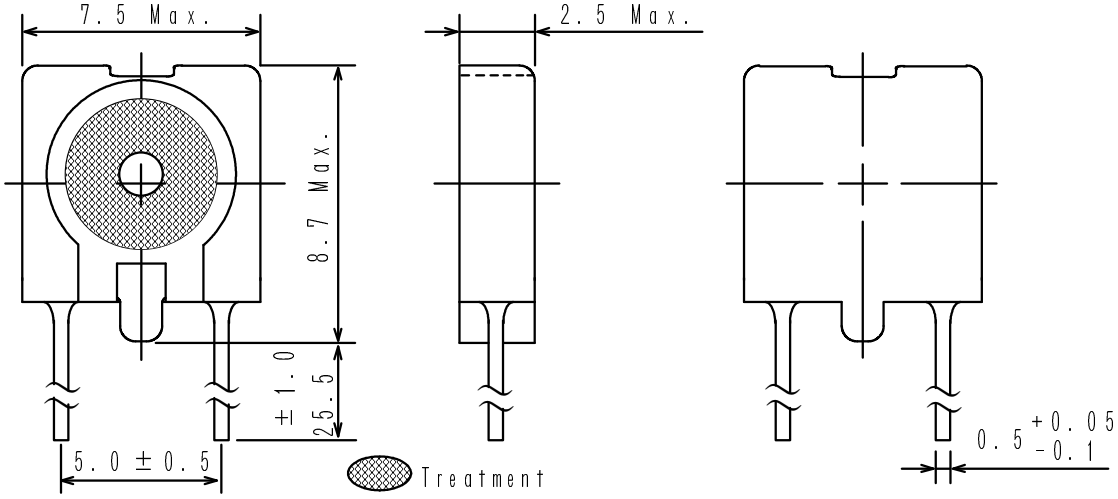


## ◆ Specification

| Part No. | Stamp | Impedance (10MHz) (Min.) | D.C.R. (mΩ) [Max.] |
|---|---|---|---|
| BM27NP-200-6A | 200A | 450Ω | 50 |
| BM27NP-300-6A | 300A | 620Ω | 60 |
| BM27NP-400-6A | 400A | 860Ω | 70 |
| BM27NP-200-5B | 200B | 570Ω | 60 |
| BM27NP-300-5B | 300B | 850Ω | 90 |
| BM27NP-400-5B | 400B | 1.1kΩ | 110 |

# Type: BM27
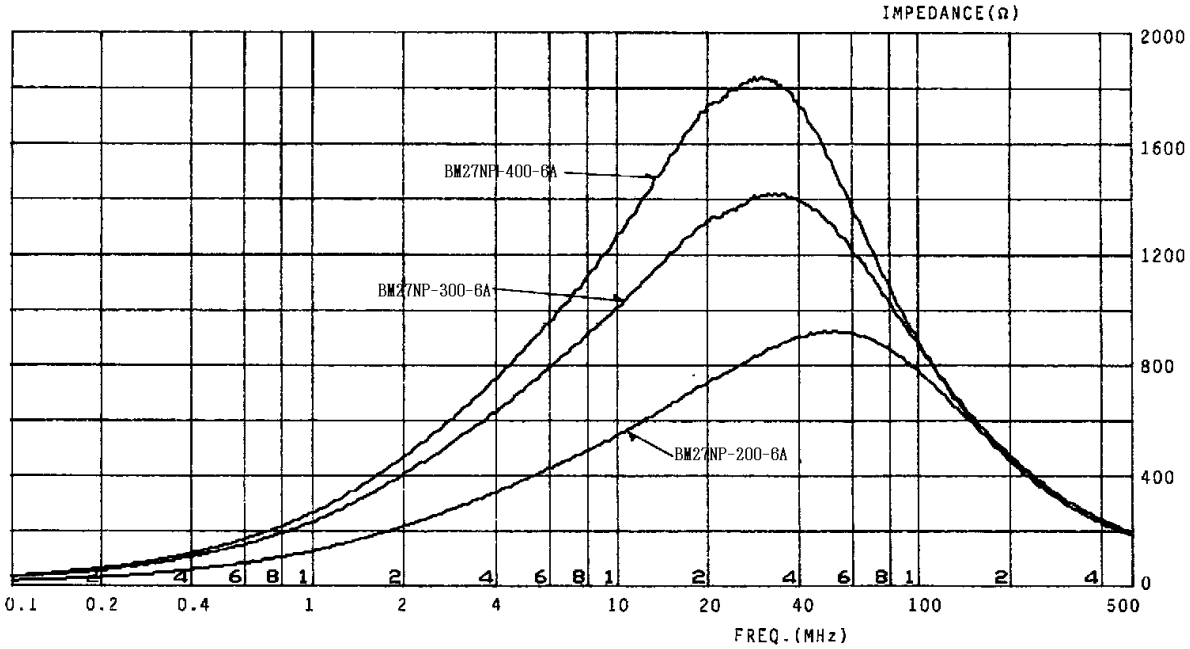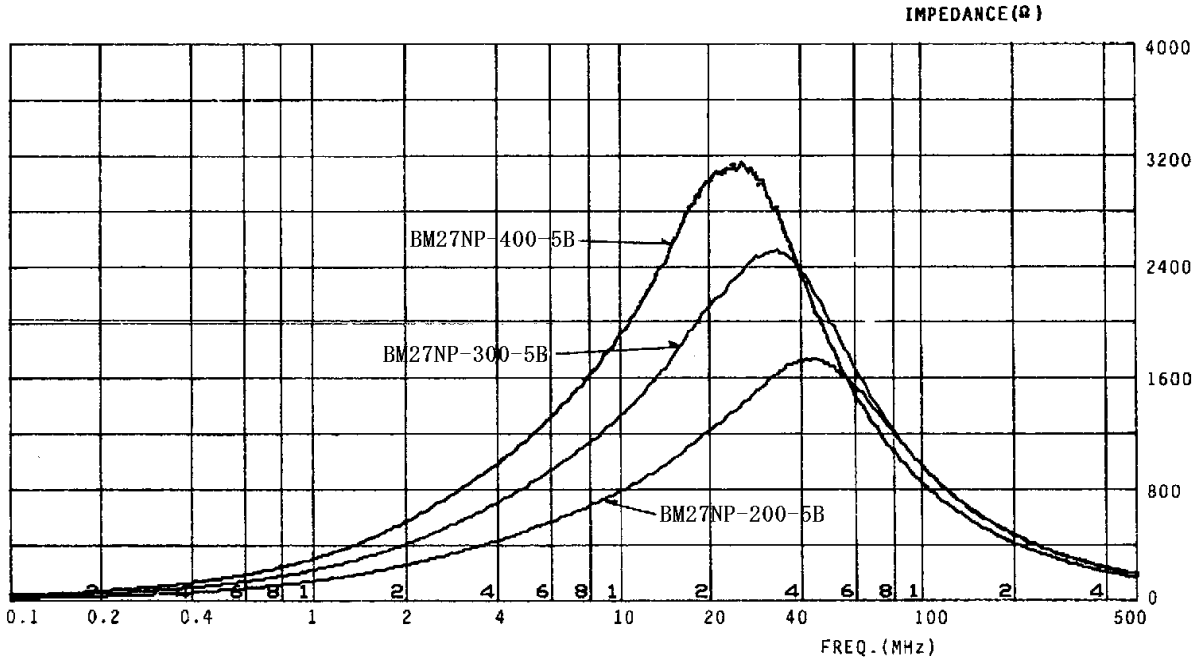
## ◆ Impedance Characteristics (for reference)