DATE	REV	ECN	APP'D. BY
1/23/06	A3	7454	JM

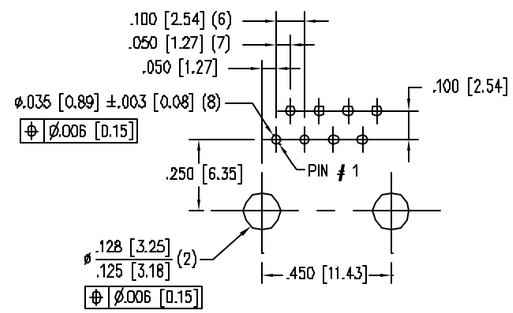

P.C.B. RECOMMENDED HOLE LAYOUT
SEEN FROM COMPONENT SIDE

ALL CENTERLINE DIMENSIONS ARE BASIC.

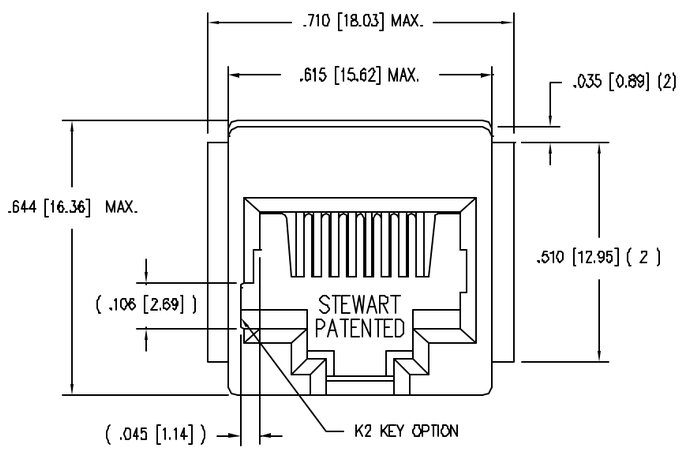

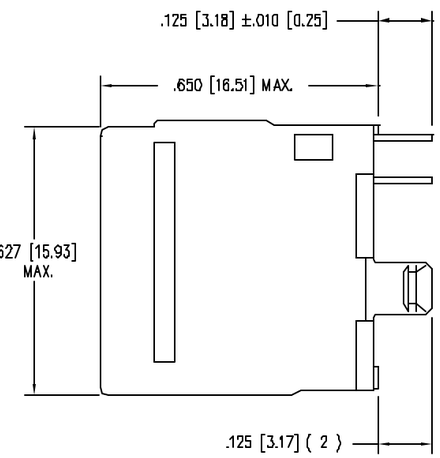

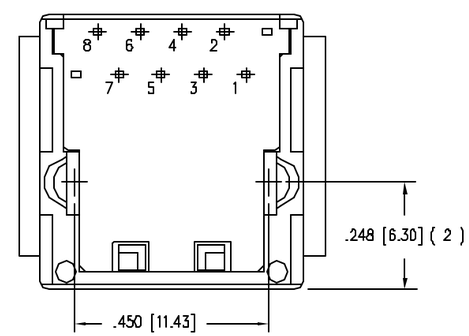

NOTES:

1. CONNECTOR MATERIALS:
   HOUSING: THERMOPLASTIC UL94 V-0
   CONTACTS: COPPER ALLOY
   CONTACT PLATING: SELECTIVE GOLD IN CONTACT AREA
   SEE CHART FOR PART NUMBER
2. FOR PRODUCT SPECIFICATIONS SEE PR026-01.
3. DIMENSIONS AND TOLERANCES COMPLY WITH FCC/CFR 47, PART 68.

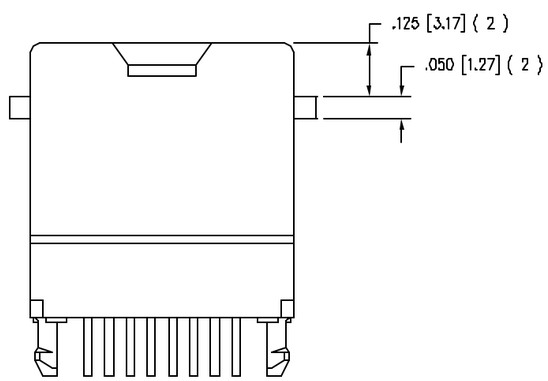

30 MICRO-INCHES [0.76um]	SS-650810-A-FLS-K2
CONTACT PLATING IN MATING AREA	PART NUMBER

THIRD ANGLE PROJECTION

DO NOT SCALE DRAWING

DRAWING IS SUBJECT TO CHANGE WITHOUT NOTICE

DIMENSIONS: INCHES [METRIC]

UNLESS OTHERWISE SPECIFIED TOLERANCES ARE ±.005 [0.13] ANGLES ARE ± 1°

SHEET NO. 1 OF 1

Bel Stewart Connector

11118 Susquehanna Trail South
Glen Rock, PA 17327-9199
(717) 235-7512 Fax: (717) 235-7954 http://www.stewartconnector.com

TITLE: EIGHT CONTACT TEN POSITION VERTICAL MOUNT UNSHIELDED JACK, FLANGED, K2 KEYING OPTION

THIS DRAWING AND THE SUBJECT MATTER SHOWN THEREON ARE CONFIDENTIAL AND THE PROPRIETARY PROPERTY OF BEL STEWART CONNECTOR AND SHALL NOT BE REPRODUCED, COPIED, OR USED IN ANY MANNER WITHOUT PRIOR WRITTEN CONSENT OF BEL STEWART CONNECTOR. THE SUBJECT MATTER MAY BE PATENTED OR A PATENT MAY BE PENDING.

DRN BY:	DAB	DATE	4/4/03
APPD BY:	RGC	DATE	5-2-03
DWG NO.	CT650120	REV.	A3

REV. 6/3/05

AutoCAD