THE INFORMATION CONTAINED HEREIN IS CONSIDERED "PROPRIETARY" TO BEL FUSE INC. AND SHALL NOT BE COPIED, REPRODUCED OR DISCLOSED WITHOUT THE WRITTEN APPROVAL OF BEL FUSE INC.

RoHS 2002/95/EC

PRELIMINARY

ELECTRICAL CHARACTERISTICS @ 25°C

OPERATING TEMPERATURE RANGE: -40°C TO +85°C

1.0 TURNS RATIO: (P4-P2-P5) : (J3-J6) : 1CT : 1CT ± 3%
(P1-P2-P3) : (J1-J2) : 1CT : 1CT ± 3%

2.0 INDUCTANCE: (P1-P3) : 350uH MIN. @ 0.1V, 100KHz, 8mA DC Bias
(P4-P5) : 350uH MIN. @ 0.1V, 100KHz, 8mA DC Bias

3.0 LEAKAGE INDUCTANCE: P5-P4(WITH J6 AND J3 SHORT) : 0.3uH MAX. @ 1MHz
P1-P3(WITH J2 AND J1 SHORT) : 0.3uH MAX. @ 1MHz

4.0 INTERWINDING CAPACITANCE: (P5,P2,P4) TO (J6,J3) : 60pF MAX. @ 1MHz
(P3,P2,P1) TO (J2,J1) : 60pF MAX. @ 1MHZ

5.0 DC RESISTANCE:(J6-J3)=(J2-J1) : 1.5 ohms Max.

6.0 RETURN LOSS: (P1-P3)=100 OHMS AND (P4-P5)=100 OHM REF.
1MHz TO 30MHz : 18dB MIN.
30MHz TO 80MHz : 12dB MIN.
NOTE: 100 OHMS CONNECTED TO (J2-J1) OR (J6-J3).

7.0 DIELECTRIC WITHSTAND: (J1, J2) TO (P1, P3) : 1500 Vrms
(J3, J6) TO (P5, P3) : 1500 Vrms

8.0 INSERTION LOSS:RS=RL=100 ohms
100KHz TO 100MHz : 1.1 dB TYP

9.0 RISE TIME: RS=100 OHMS AND RL = 100 OHMS
OUTPUT VOLTAGE = 1 V peak : 3.0 nS MAX
PULSE WIDTH= 112nS : 3.0 nS MAX

10.0 CROSS TALK1-100 MHz : 30 dB TYP

11.0 COMMON TO COMMON MODE ATTENUATION:
1MHz TO 100MHz : 35dB TYP

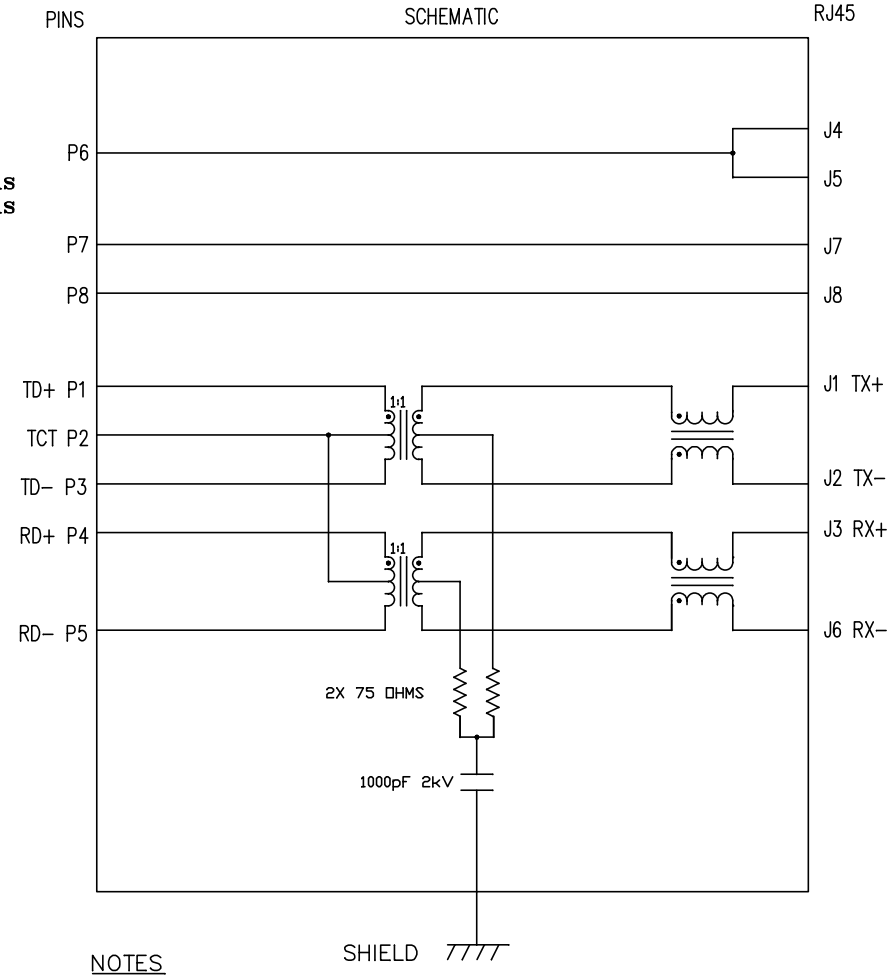

NOTES

1.0 ALL RESISTORS ARE 5% TOLERANCE.

ORIGINATED BY	DATE	TITLE	PART NO. / DRAWING NO.	STANDARD DIM. TOL. IN INCH		[ ] METRIC DIM. AS REFERENCE	
ZL Wang	01-21-10	MagJack® 100/100BT TAB UP SHIELDED PATENTED	SI-55003-F	.X		UNIT : INCH [mm]	REV. : 01
DRAWN BY	DATE		FILE NAME	.XX		SCALE : N/A	SIZE : A4
RS Zhang	01-21-10		SI-55003-F.DWG	.XXX	±0.005		PAGE : 2

bel COMPONENTS FOR A CONNECTED PLANET

This document is electronically generated. This is a controlled copy if used internally

THE INFORMATION CONTAINED HEREIN IS CONSIDERED "PROPRIETARY" TO BEL FUSE INC. AND SHALL NOT BE COPIED, REPRODUCED OR DISCLOSED WITHOUT THE WRITTEN APPROVAL OF BEL FUSE INC.

RoHS 2002/95/EC

PRELIMINARY

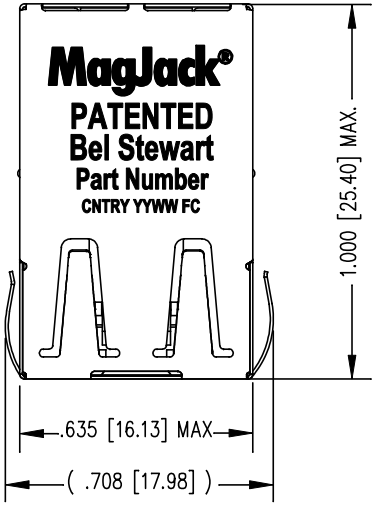

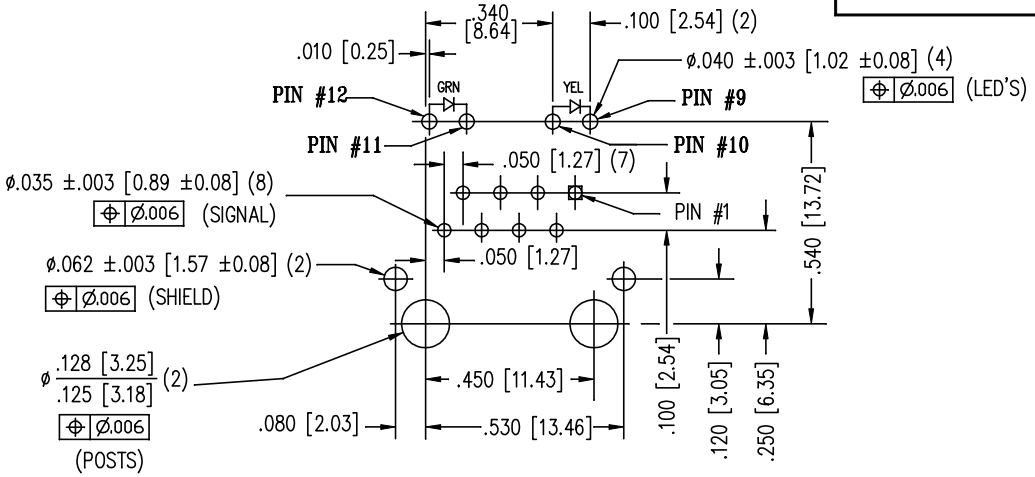

P.C.B. RECOMMENDED HOLE LAYOUT
SEEN FROM COMPONENT SIDE

ALL CENTERLINE DIMENSIONS ARE BASIC.

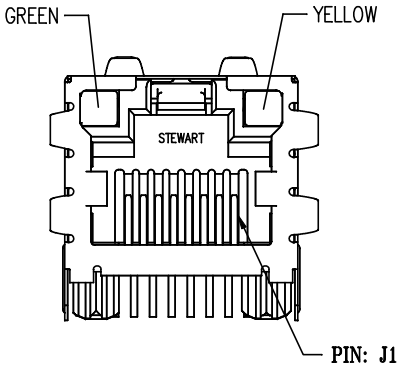

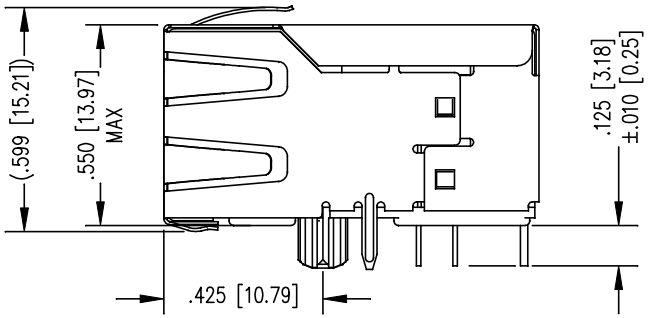

LED SPECIFICATION			
STANDARD LED	WAVELENGTH	FORWARD V (MAX)	*(TYP)
GREEN	565 nm	2.5 V	2.2 V
YELLOW	590 nm	2.5 V	2.1 V

*WITH A FORWARD CURRENT OF 20 mA (TYP)

NOTES:

1. CONNECTOR MATERIALS:
   HOUSING: THERMOPLASTIC UL94 V-0
   CONTACT/SHIELD: COPPER ALLOY
   SHIELD PLATING: NICKEL OR TIN
   CONTACT PLATING: SELECTIVE GOLD,
   50 MICRO-INCHES MIN. IN CONTACT AREA.
2. PIN NOT ELECTRICALLY CONNECTED MAYBE OMITTED.
   SEE ELECTRICAL DRAWING FOR OMITTED PINS.
3. TOLERANCES COMPLY WITH F.C.C. DIMENSION REQUIREMENTS.
4. ALL TOLERANCES NOT OTHERWISE SPECIFIED TO BE ±.005 [0.13]
5. REFLOW AND WAVE SOLDER COMPATIBLE-260°C FOR 10 SECONDS MAX.

ORIGINATED BY: ZL Wang	DATE: 01-21-10	TITLE: MagJack® 100/100BT TAB UP SHIELDED PATENTED	PART NO. / DRAWING NO.: SI-55003-F	STANDARD DIM. TOL. IN INCH	[ ] METRIC DIM. AS REFERENCE
DRAWN BY: RS Zhang	DATE: 01-21-10		FILE NAME: SI-55003-F.DWG	.X / .XX / .XXX ±0.005	UNIT : INCH [mm] / REV. : 01
					SCALE : N/A / SIZE : A4
					PAGE : 3

bel COMPONENTS FOR A CONNECTED PLANET

This document is electronically generated. This is a controlled copy if used internally

THE INFORMATION CONTAINED HEREIN IS CONSIDERED "PROPRIETARY" TO BEL FUSE INC. AND SHALL NOT BE COPIED, REPRODUCED OR DISCLOSED WITHOUT THE WRITTEN APPROVAL OF BEL FUSE INC.

RoHS 2002/95/EC

PRELIMINARY

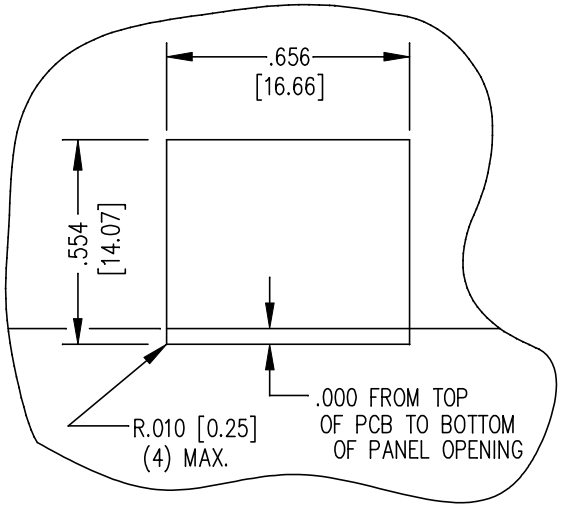

SUGGESTED PANEL OPENING

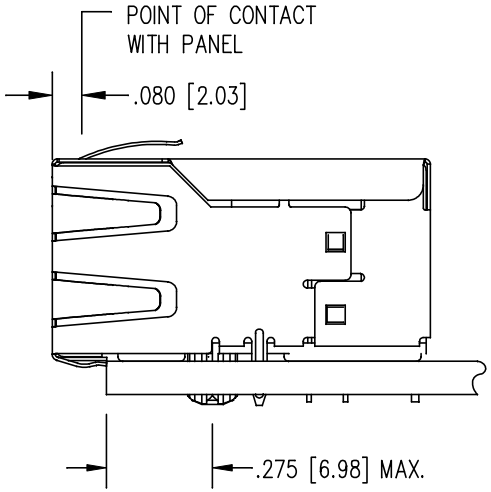

1. THE SUGGESTED PANEL OPENING IS INTENDED TO GIVE THE USER THE ABILITY TO HAVE REASONABLE JACK / PANEL CLEARANCES YET MAINTAIN RELIABLE GROUNDING CAPABILITY.
2. ALL TOLERANCES NOT OTHERWISE SPECIFIED TO BE ±.005 [0.13]

ORIGINATED BY	DATE	TITLE	PART NO. / DRAWING NO.	STANDARD DIM. TOL. IN INCH		[ ] METRIC DIM. AS REFERENCE	
ZL Wang	01-21-10	MagJack® 100/100BT TAB UP SHIELDED PATENTED	SI-55003-F	.X		UNIT : INCH [mm]	REV. : 01
DRAWN BY	DATE		FILE NAME	.XX		SCALE : N/A	SIZE : A4
RS Zhang	01-21-10		SI-55003-F.DWG	.XXX	±0.005		PAGE : 4

bel COMPONENTS FOR A CONNECTED PLANET

This document is electronically generated. This is a controlled copy if used internally