THE INFORMATION CONTAINED HEREIN IS CONSIDERED "PROPRIETARY" TO BEL FUSE INC. AND SHALL NOT BE COPIED, REPRODUCED OR DISCLOSED WITHOUT THE WRITTEN APPROVAL OF BEL FUSE INC.

LED1 POLARITY			LED2 POLARITY		
PIN 11	PIN 12	COLOR	PIN 13	PIN 14	COLOR
-	+	YELLOW	+	-	ORANGE
			-	+	GREEN

ELECTRICAL CHARACTERISTICS @ 25°C

TURNS RATIO
- TP1 — 1CT : 1CT ±2%
- TP2 — 1CT : 1CT ±2%
- TP3 — 1CT : 1CT ±2%
- TP4 — 1CT : 1CT ±2%

OCL @ 100kHz/100mVRMS
- 8mA DC BIAS — 350mH MIN.

INS. LOSS
- 1MHz TO 100MHz — -1.2 dB MAX

RET. LOSS (MIN)
- 0.5MHz-40MHz — -18 dB
- 40MHz-100MHz — -12+20LOG(f/80MHz) dB

CROSS TALK
- 100kHz - 100MHz — -33+20LOG(f/100MHz)dB MIN

CM TO CM REJ
- 100kHz - 100MHz — -30 dB MIN

CM TO DM REJ
- 100kHz - 100MHz — -35 dB MIN

HIPOT (Isolation Voltage): 1500 Vrms or 2250VDC

LED 1
- VF (FORWARD VOLTAGE) — IF=20mA YELLOW 2.1V TYP.
- λD (DOMINANT WAVELENGTH) — IF=20mA YELLOW 590nm TYP.

LED 2
- VF (FORWARD VOLTAGE) — IF=20mA GREEN 2.2V TYP.; ORANGE 2.0V TYP.
- λD (DOMINANT WAVELENGTH) — IF=20mA GREEN 565nm TYP.; ORANGE 610nm TYP.

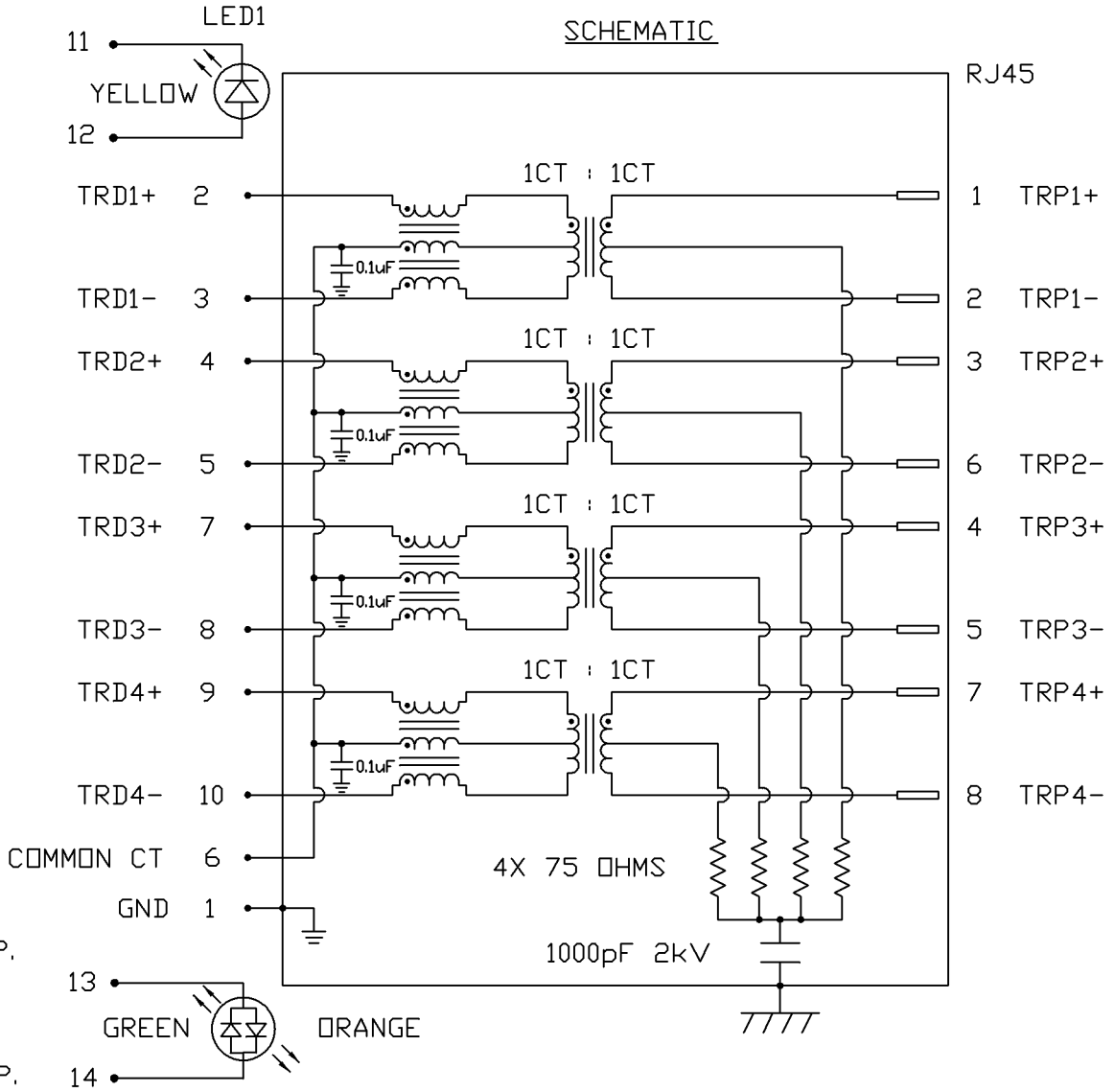

ORIGINATED BY	DATE	TITLE	PART NO. / DRAWING NO.	STANDARD DIM. TOL. IN INCH	[ ] METRIC DIM. AS REFERENCE	
WANCHUNG CHOW	07-28-08	gigabit MagJack® (-43 10-pin Config, Tab Up)	0826-1XX1-46	.X	UNIT : INCH [mm]	REV. : H
DRAWN BY	DATE		FILE NAME	.XX	SCALE : N/A	SIZE : A4
WEIDE LEE	07-28-08		0826-1XX1-46_H.DWG	.XXX		PAGE : 2

bel COMPONENTS FOR A CONNECTED PLANET

This document is electronically generated. This is a controlled copy if used internally

THE INFORMATION CONTAINED HEREIN IS CONSIDERED "PROPRIETARY" TO BEL FUSE INC. AND SHALL NOT BE COPIED, REPRODUCED OR DISCLOSED WITHOUT THE WRITTEN APPROVAL OF BEL FUSE INC.

MECHANICAL SPECIFICATION

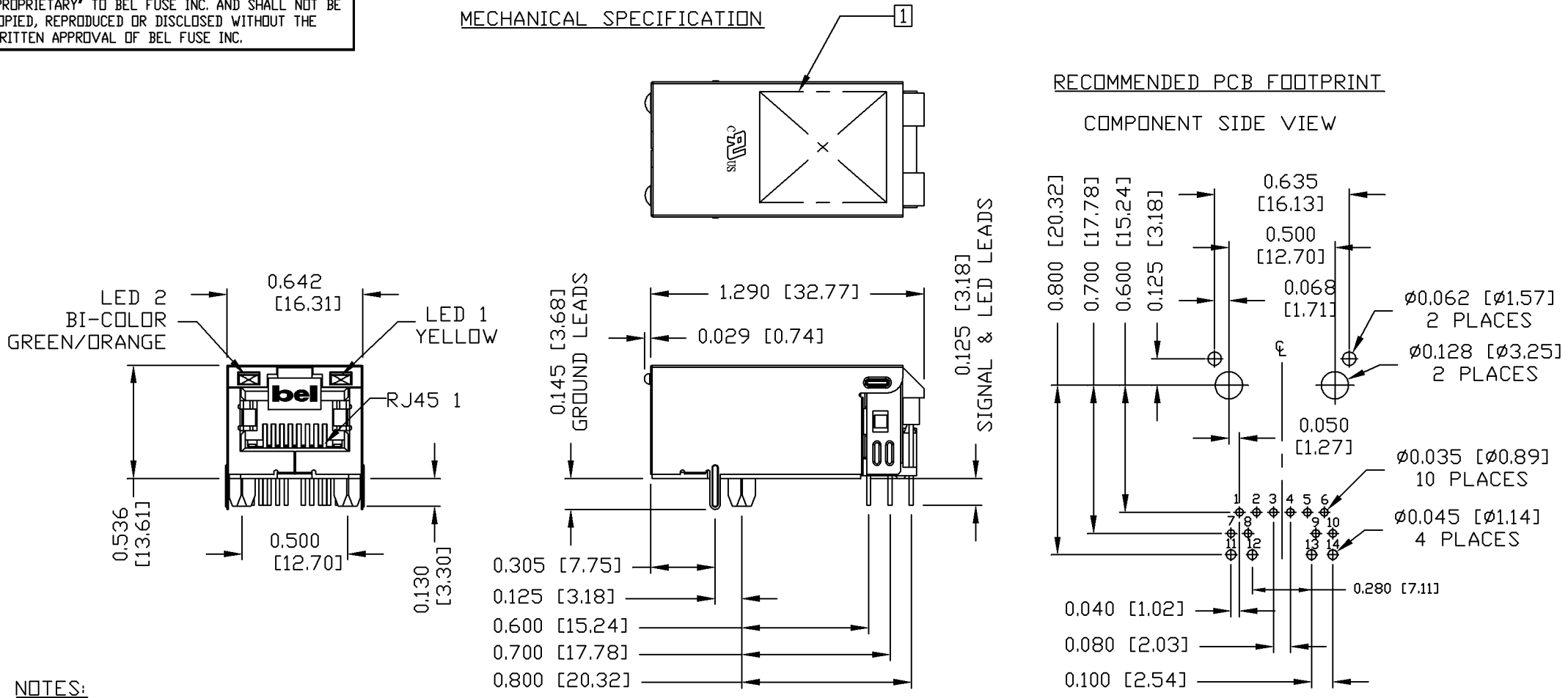

NOTES:

PLASTIC HOUSING: THERMOPLASTIC PA
FLAMMABILITY RATING UL 94V-0

CONTACTS: 50 MICRO-INCH HARD GOLD PLATING

OUTPUT PINS: TIN-COATED COPPER WIRE, DIA 0.018 INCH.

METAL SHIELD: NICKEL PLATED ON COPPER ALLOY.
(ALL GROUND LEADS ARE SOLDER DIPPED)

1. MARK PART WITH MFG LOGO, MFG NAME, PART NUMBER, AND DATE CODE.

C UL US UL RECOGNIZED - FILE #E196366 AND E169987.

JACK CAVITY CONFORMS TO FCC RULES AND REGULATIONS.

ORIGINATED BY: ZX HUANG	DATE: 07-28-08	TITLE: gigabit MagJack® (-43 10-pin Config, Tab Up)	PART NO. / DRAWING NO.: 0826-1XX1-46	STANDARD DIM. TOL. IN INCH: .X, .XX, .XXX ±0.010	[ ] METRIC DIM. AS REFERENCE
DRAWN BY: BL CHEN	DATE: 07-28-08		FILE NAME: 0826-1XX1-46_H.DWG		UNIT : INCH [mm] / REV. : H
					SCALE : N/A / SIZE : A4
					PAGE : 3

bel COMPONENTS FOR A CONNECTED PLANET

This document is electronically generated. This is a controlled copy if used internally

THE INFORMATION CONTAINED HEREIN IS CONSIDERED "PROPRIETARY" TO BEL FUSE INC. AND SHALL NOT BE COPIED, REPRODUCED OR DISCLOSED WITHOUT THE WRITTEN APPROVAL OF BEL FUSE INC.

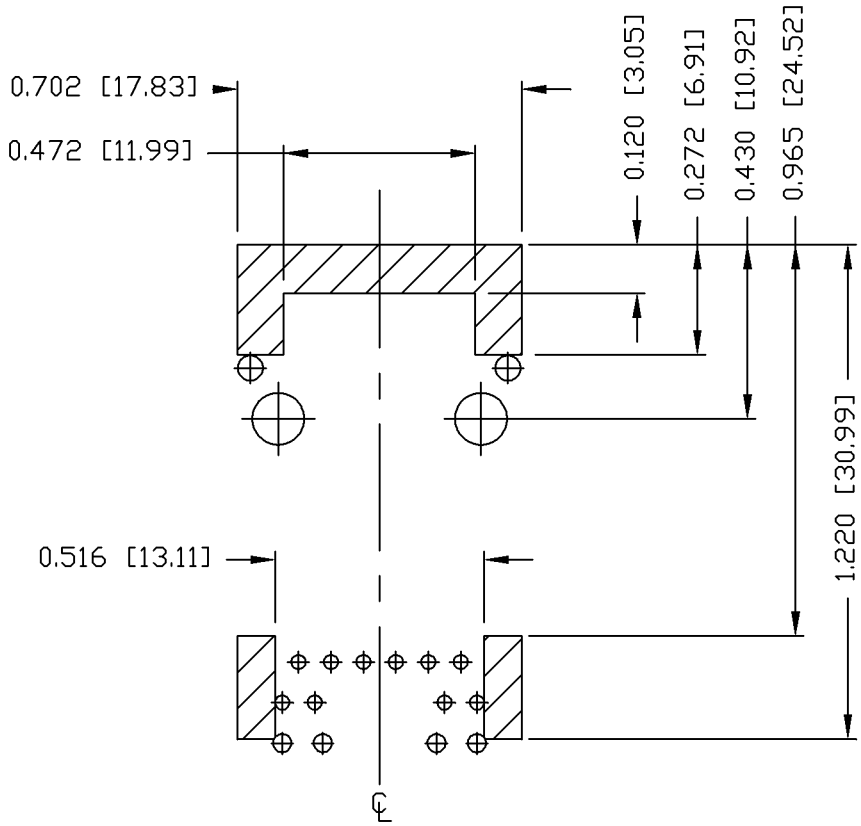

NOTES

THE SHADED AREA ON THE CUSTOMER BOARD ARE RECOMMENDED TO BE CLEAR OFF ANY VIA HOLE OR COMPONENT PAD.

ORIGINATED BY: ZX HUANG	DATE: 07-28-08	TITLE: gigabit MagJack® (-43 10-pin Config, Tab Up)	PART NO. / DRAWING NO.: 0826-1XX1-46	STANDARD DIM. TOL. IN INCH: .X / .XX / .XXX ±0.004	[ ] METRIC DIM. AS REFERENCE	bel COMPONENTS FOR A CONNECTED PLANET
DRAWN BY: BL CHEN	DATE: 07-28-08		FILE NAME: 0826-1XX1-46_H.DWG		UNIT : INCH [mm] / REV. : H	
					SCALE : N/A / SIZE : A4	
					PAGE : 4	

This document is electronically generated. This is a controlled copy if used internally

THE INFORMATION CONTAINED HEREIN IS CONSIDERED "PROPRIETARY" TO BEL FUSE INC. AND SHALL NOT BE COPIED, REPRODUCED OR DISCLOSED WITHOUT THE WRITTEN APPROVAL OF BEL FUSE INC.

SUGGESTED PANEL OPENING

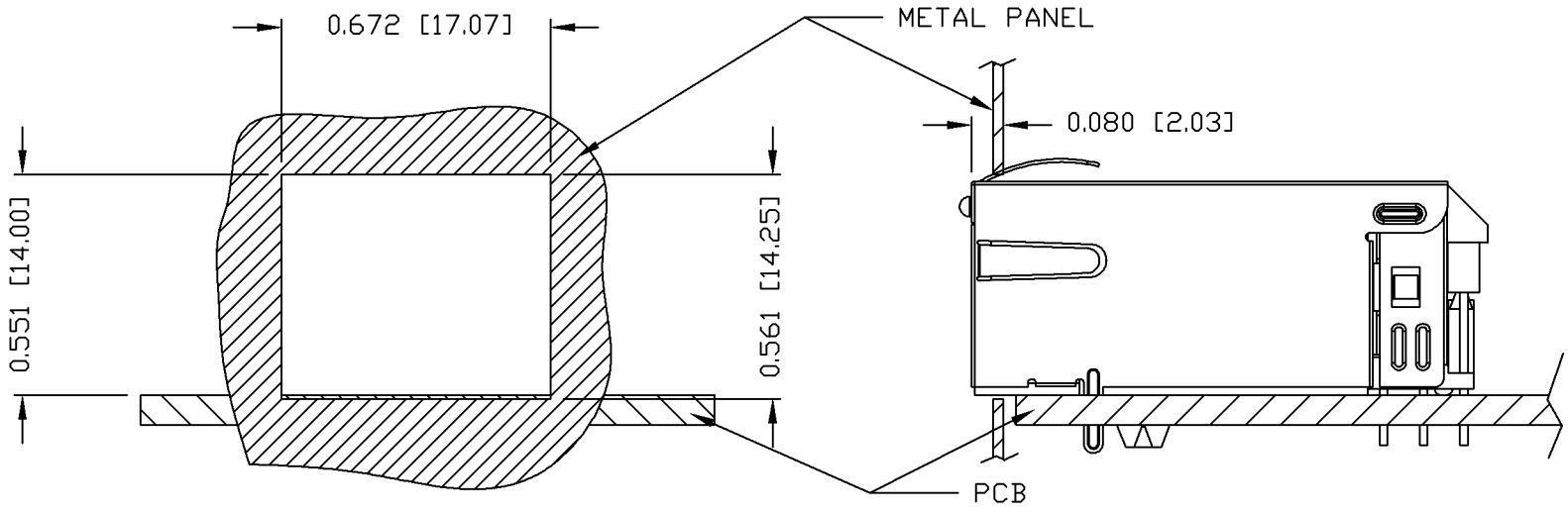

NOTE:

THE DISTANCE OF PANEL INSIDE SURFACE RELATIVE TO FRONT SURFACE OF PART IS ONLY A SUGGESTION. IN CASE THIS DISTANCE IS DIFFERENT, THE REQUIRED PANEL OPENING DIMENSIONS CHANGE ACCORDINGLY.

PACKING INFORMATION

PACKING TRAY : 0200-9999-F6 (TOP)
0200-9999-F7 (BOTTOM)

PACKING QUANTITY : 40 PCS FINISHED GOODS PER TRAY
10 TRAYS (400 PCS FINISHED GOODS) PER CARTON BOX

NOTE : CARDBOARDS ARE PLACED BETWEEN LAYERS OF PACKING TRAY INSIDE CARTON BOX (INCLUDE THE UPPERMOST AND LOWERMOST TRAY)

ORIGINATED BY	DATE	TITLE	PART NO. / DRAWING NO.	STANDARD DIM. TOL. IN INCH		[ ] METRIC DIM. AS REFERENCE	
ZX HUANG	07-28-08	gigabit MagJack® (-43 10-pin Config, Tab Up)	0826-1XX1-46			UNIT : INCH [mm]	REV. : H
DRAWN BY	DATE		FILE NAME	.X		SCALE : N/A	SIZE : A4
BL CHEN	07-28-08		0826-1XX1-46_H.DWG	.XX			PAGE : 5
				.XXX	±0.004		

bel COMPONENTS FOR A CONNECTED PLANET

This document is electronically generated. This is a controlled copy if used internally