THE INFORMATION CONTAINED HEREIN IS CONSIDERED "PROPRIETARY" TO BEL FUSE INC. AND SHALL NOT BE COPIED, REPRODUCED OR DISCLOSED WITHOUT THE WRITTEN APPROVAL OF BEL FUSE INC.

LED1 POLARITY			LED2 POLARITY		
PIN 13	PIN 14	COLOR	PIN 15	PIN 16	COLOR
−	+	YELLOW	+	−	ORANGE
			−	+	GREEN

ELECTRICAL CHARACTERISTICS @ 25°C

TURNS RATIO	
TP1	1CT : 1CT ±2%
TP2	1CT : 1CT ±2%
TP3	1CT : 1CT ±2%
TP4	1CT : 1CT ±2%
OCL @ 100kHz/100mVRMS	
8mA DC BIAS	350mH MIN.
INS. LOSS	
0.1MHz TO 1MHz	−1.1 dB MAX
1MHz TO 65MHz	−0.5 dB MAX
65MHz TO 100MHz	−0.8 dB MAX
100MHz TO 125MHz	−1.2 dB MAX
RET. LOSS (MIN)	
0.5MHz−40MHz	−18 dB
40MHz−100MHz	−12+20LOG(f/80MHz) dB
CM TO CM REJ	
100kHz − 100MHz	−30 dB MIN
CM TO DM REJ	
100kHz − 100MHz	−35 dB MIN
HIPOT (Isolation Voltage):	1500 Vrms or 2250VDC
LED 1	
VF (FORWARD VOLTAGE)	IF=20mA YELLOW 2.1V TYP.
λD (DOMINANT WAVELENGTH)	IF=20mA YELLOW 590nm TYP.
LED 2	
VF (FORWARD VOLTAGE)	IF=20mA GREEN 2.2V TYP.
	ORANGE 2.0V TYP.
λD (DOMINANT WAVELENGTH)	IF=20mA GREEN 565nm TYP.
	ORANGE 610nm TYP.

SCHEMATIC

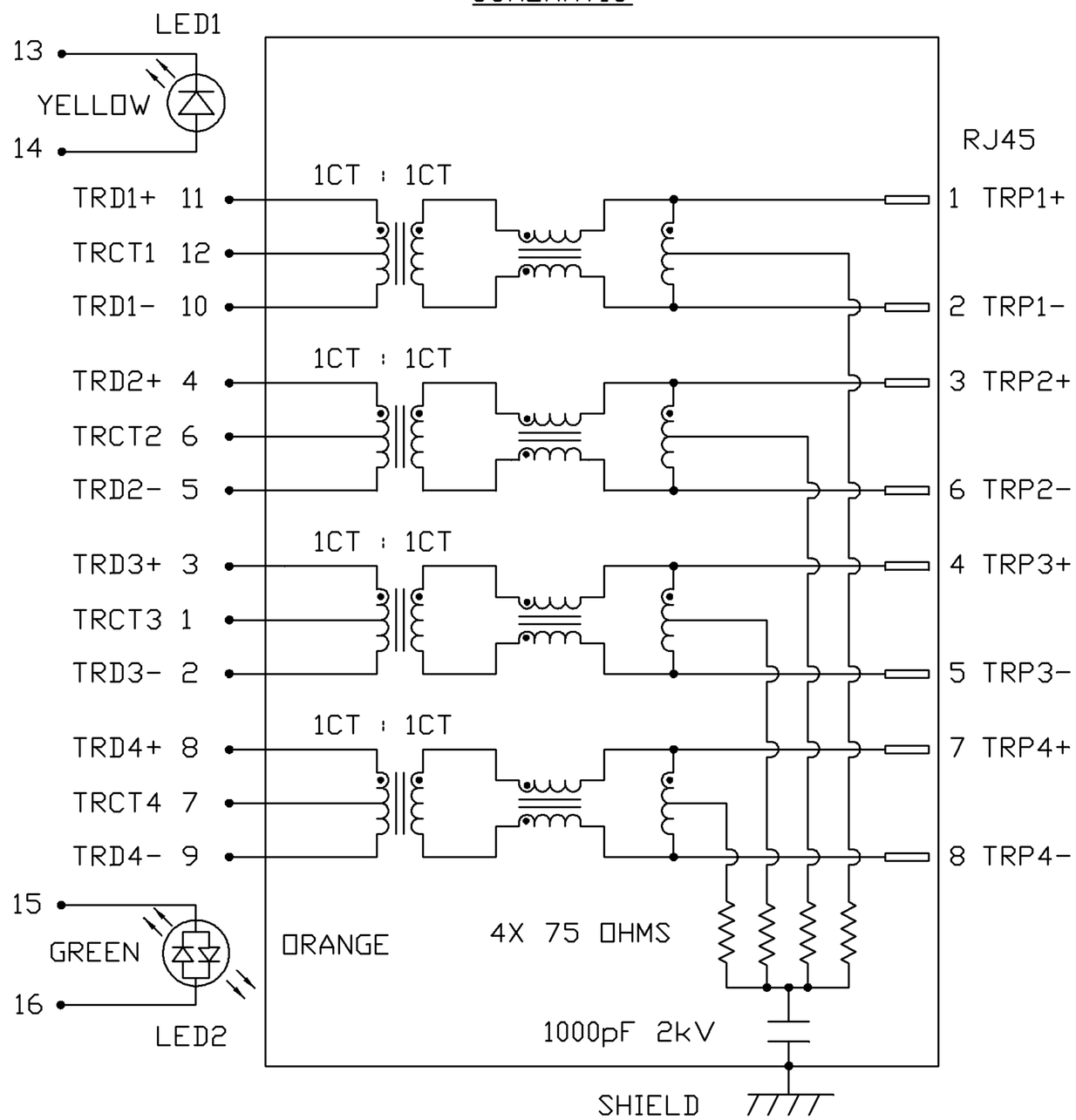

ORIGINATED BY	DATE	TITLE	PART NO. / DRAWING NO.	STANDARD DIM. TOL. IN INCH	[ ] METRIC DIM. AS REFERENCE	
WANGCHUNG CHOW	06-16-08	gigabit MagJack® (12 cores, Tab Up)	0826-1X1T-23	.X	UNIT : INCH [mm]	REV. : J
DRAWN BY	DATE		FILE NAME	.XX	SCALE : N/A	SIZE : A4
WEIDE LEE	06-16-08		0826-1X1T-23_J.DWG	.XXX		PAGE : 2

bel COMPONENTS FOR A CONNECTED PLANET

This document is electronically generated. This is a controlled copy if used internally

THE INFORMATION CONTAINED HEREIN IS CONSIDERED "PROPRIETARY" TO BEL FUSE INC. AND SHALL NOT BE COPIED, REPRODUCED OR DISCLOSED WITHOUT THE WRITTEN APPROVAL OF BEL FUSE INC.

MECHANICAL SPECIFICATION

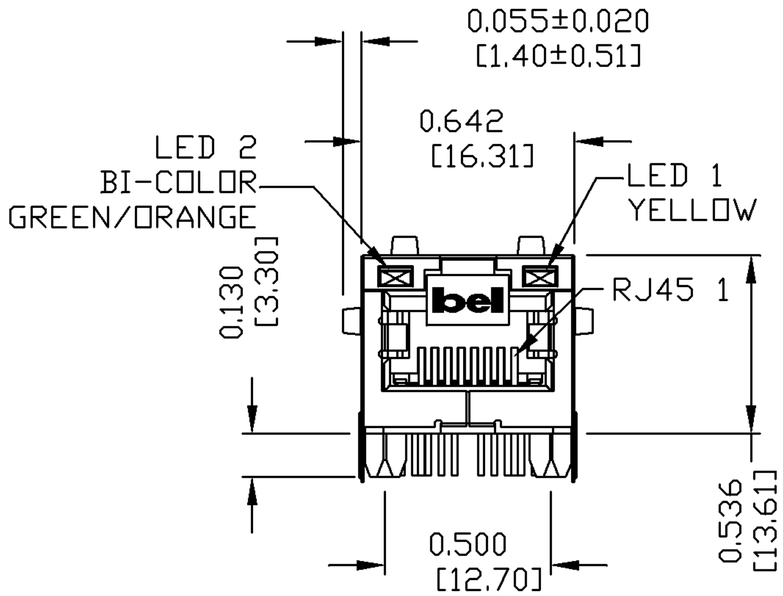

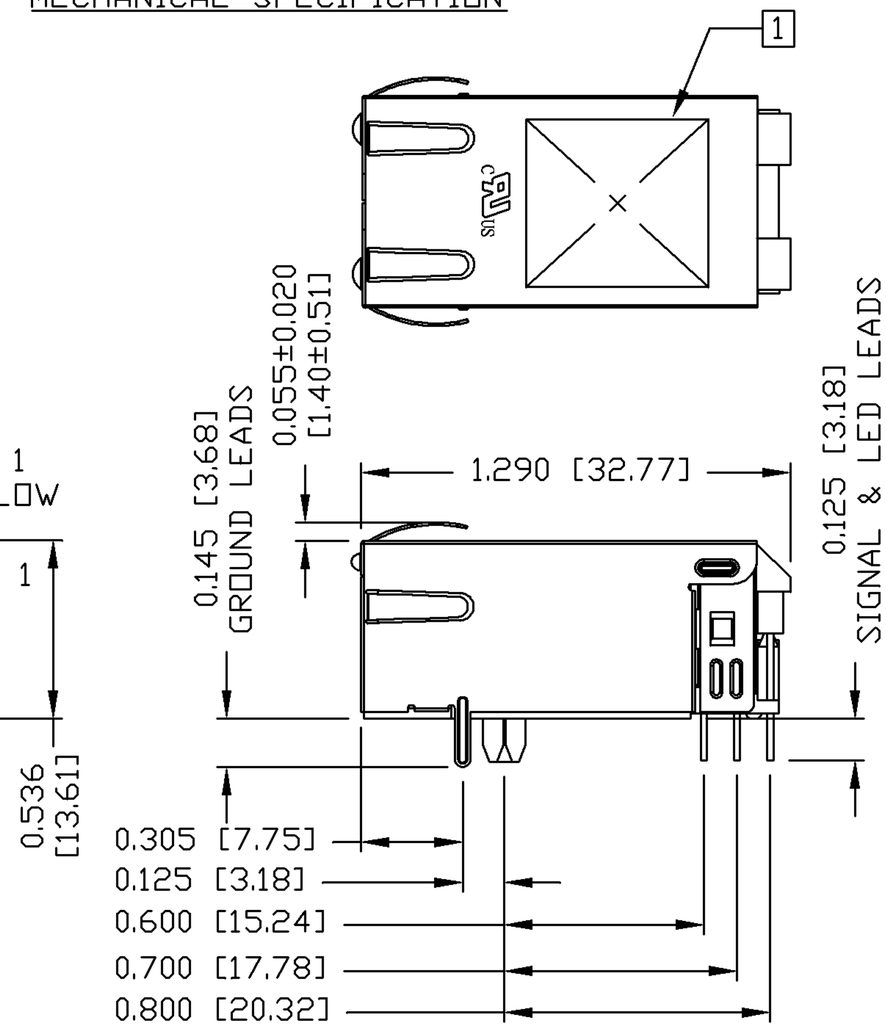

RECOMMENDED PCB FOOTPRINT

COMPONENT SIDE VIEW

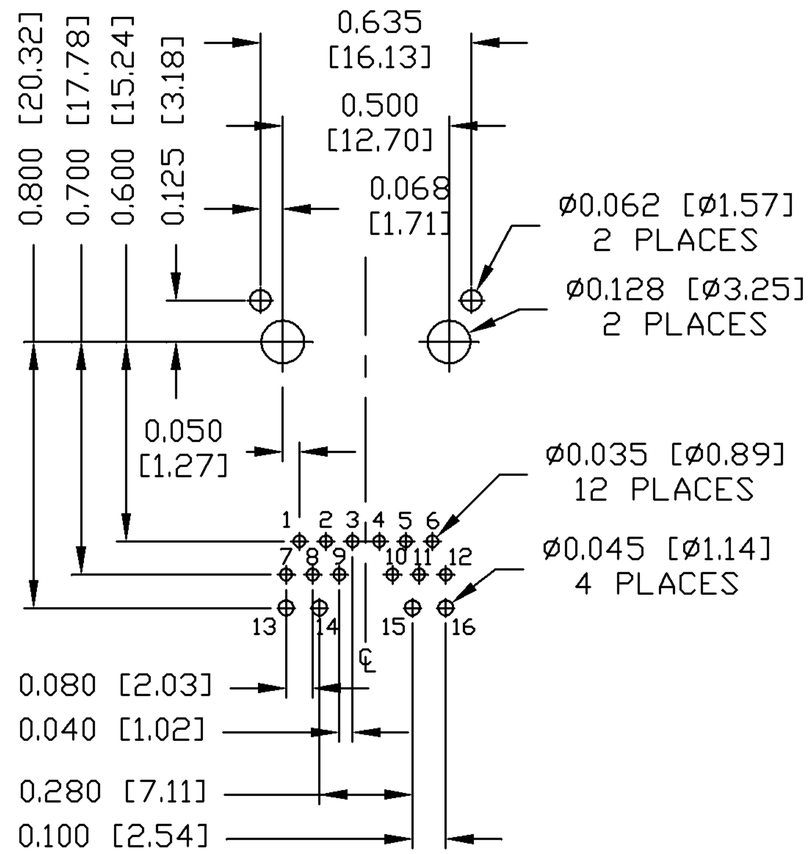

NOTES:

PLASTIC HOUSING: THERMOPLASTIC PA.
FLAMMABILITY RATING UL 94V-0

CONTACTS: 50 MICRO-INCH HARD GOLD PLATING

OUTPUT PINS: TIN-COATED COPPER WIRE, DIA 0.018 INCH.

METAL SHIELD: NICKEL PLATED ON COPPER ALLOY.
(ALL GROUND LEADS ARE SOLDER DIPPED)

1. MARK PART WITH MFG LOGO, MFG NAME,PART NUMBER, AND DATE CODE.

c UL us UL RECOGNIZED - FILE #E196366 AND E169987.
JACK CAVITY CONFORMS TO FCC RULES AND REGULATIONS.

ORIGINATED BY	DATE	TITLE	PART NO. / DRAWING NO.	STANDARD DIM. TOL. IN INCH		[ ] METRIC DIM. AS REFERENCE	
BILL CHEN	06-16-08	gigabit MagJack® (12 cores, Tab Up)	0826-1X1T-23	.X		UNIT : INCH [mm]	REV. : J
DRAWN BY	DATE		FILE NAME	.XX		SCALE : N/A	SIZE : A4
ZX HUANG	06-16-08		0826-1X1T-23_J.DWG	.XXX	±0.010		PAGE : 3

bel COMPONENTS FOR A CONNECTED PLANET

This document is electronically generated. This is a controlled copy if used internally

THE INFORMATION CONTAINED HEREIN IS CONSIDERED 'PROPRIETARY' TO BEL FUSE INC. AND SHALL NOT BE COPIED, REPRODUCED OR DISCLOSED WITHOUT THE WRITTEN APPROVAL OF BEL FUSE INC.

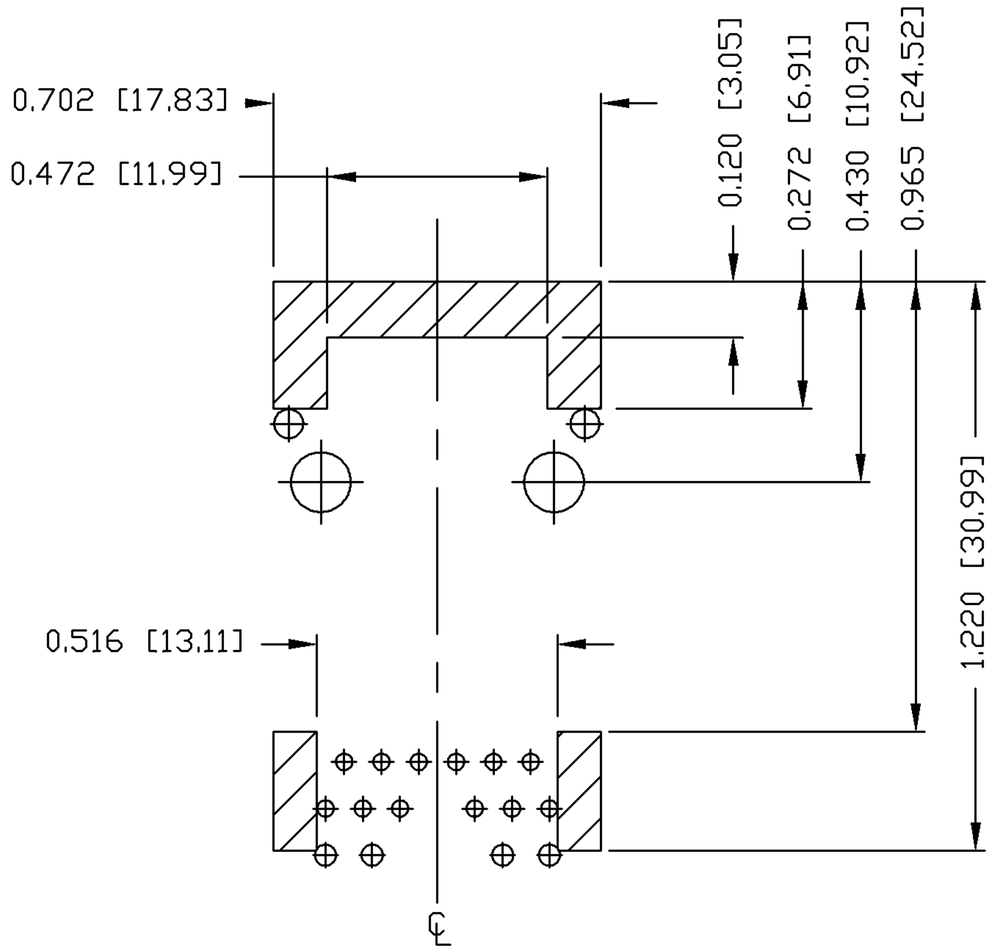

NOTES

THE SHADED AREA ON THE CUSTOMER BOARD ARE RECOMMENDED TO BE CLEAR OFF ANY VIA HOLE OR COMPONENT PAD.

ORIGINATED BY: BILL CHEN	DATE: 06-16-08	TITLE: gigabit MagJack® (12 cores, Tab Up)	PART NO. / DRAWING NO.: 0826-1X1T-23	STANDARD DIM. TOL. IN INCH	[ ] METRIC DIM. AS REFERENCE	bel COMPONENTS FOR A CONNECTED PLANET
DRAWN BY: ZX HUANG	DATE: 06-16-08		FILE NAME: 0826-1X1T-23_J.DWG	.X / .XX / .XXX ±0.004	UNIT : INCH [mm] / REV. : J	
					SCALE : N/A / SIZE : A4	
					PAGE : 4	

This document is electronically generated. This is a controlled copy if used internally

THE INFORMATION CONTAINED HEREIN IS CONSIDERED "PROPRIETARY" TO BEL FUSE INC. AND SHALL NOT BE COPIED, REPRODUCED OR DISCLOSED WITHOUT THE WRITTEN APPROVAL OF BEL FUSE INC.

SUGGESTED PANEL OPENING

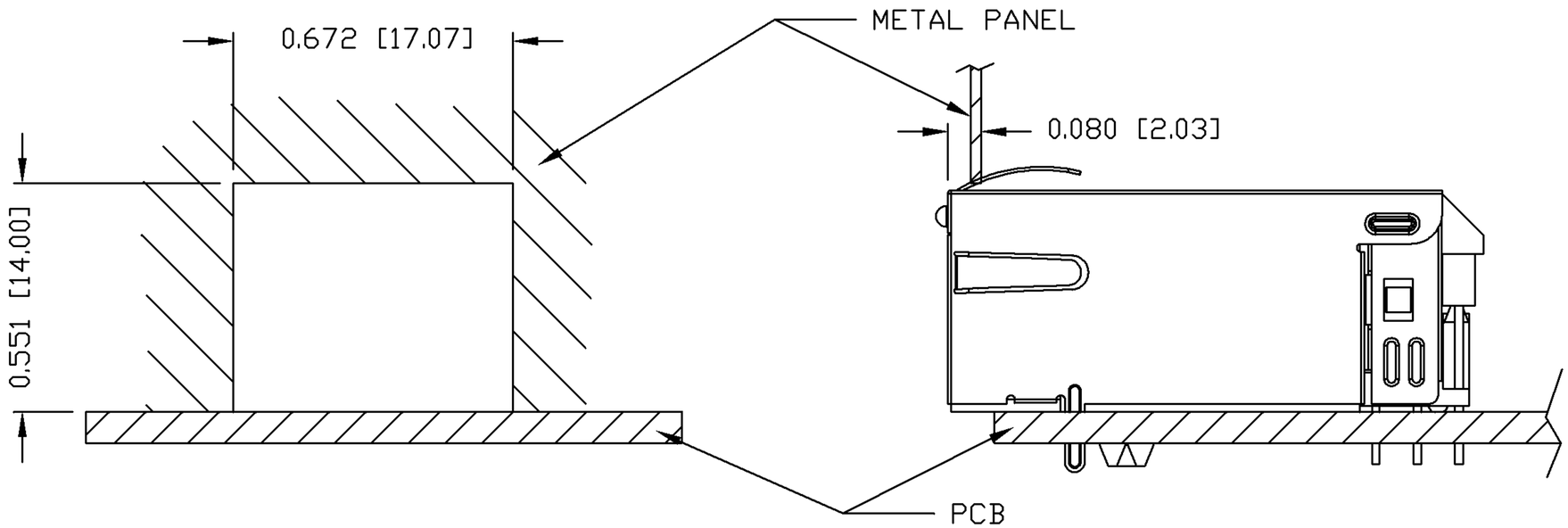

NOTE:

THE DISTANCE OF PANEL INSIDE SURFACE RELATIVE TO FRONT SURFACE OF PART IS ONLY A SUGGESTION.
IN CASE THIS DISTANCE IS DIFFERENT, THE REQUIRED PANEL OPENING DIMENSIONS CHANGE ACCORDINGLY.

PACKING INFORMATION

PACKING TRAY : 0200-9999-F6 (TOP)
0200-9999-F7 (BOTTOM)

PACKING QUANTITY : 40 PCS FINISHED GOODS PER TRAY
10 TRAYS (400 PCS FINISHED GOODS) PER CARTON BOX

NOTE : CARDBOARDS ARE PLACED BETWEEN LAYERS OF PACKING TRAY INSIDE CARTON BOX
(INCLUDE THE UPPERMOST AND LOWERMOST TRAY)

ORIGINATED BY: BILL CHEN	DATE: 06-16-08	TITLE: gigabit MagJack® (12 cores, Tab Up)	PART NO. / DRAWING NO.: 0826-1X1T-23	STANDARD DIM. TOL. IN INCH	[ ] METRIC DIM. AS REFERENCE	bel COMPONENTS FOR A CONNECTED PLANET
DRAWN BY: ZX HUANG	DATE: 06-16-08		FILE NAME: 0826-1X1T-23_J.DWG	.X / .XX / .XXX ±0.004	UNIT : INCH [mm] / REV. : J	
					SCALE : N/A / SIZE : A4	
					PAGE : 5	

This document is electronically generated. This is a controlled copy if used internally