RS1G180MN

Nch 40V 18A Power MOSFET

Datasheet

V_{DSS}	40V
$R_{DS(on)}$ at 10V (Max.)	7.0mΩ
$R_{DS(on)}$ at 4.5V (Max.)	9.2mΩ
I_D	18A
P_D	3.0W

●Outline

HSOP8

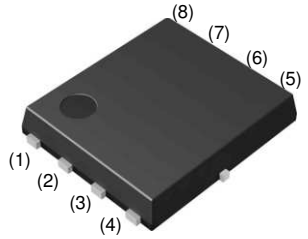

●Features

1) Low on - resistance.

2) High Power Small Mold Package (HSOP8).

3) Pb-free lead plating ; RoHS compliant

4) Halogen Free

5) 100% Rg and UIS Tested

●Inner circuit

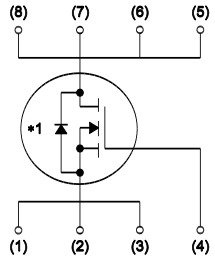

(1) Source (5) Drain
(2) Source (6) Drain
(3) Source (7) Drain
(4) Gate (8) Drain

*1 BODY DIODE

●Application

DC/DC converters

●Packaging specifications

Type	Packaging	Taping
	Reel size (mm)	330
	Tape width (mm)	12
	Basic ordering unit (pcs)	2,500
	Taping code	TB
	Marking	RS1G180MN

●Absolute maximum ratings(T_a = 25℃)

Parameter	Symbol	Value	Unit
Drain - Source voltage	V_{DSS}	40	V
Continuous drain current	I_D *1	±18	A
Pulsed drain current	$I_{D,pulse}$ *2	±72	A
Gate - Source voltage	V_{GSS}	±20	V
Power dissipation	P_D *3	3.0	W
Junction temperature	T_j	150	℃
Range of storage temperature	T_{stg}	−55 to +150	℃

© 2012 ROHM Co., Ltd. All rights reserved.

●Thermal resistance

Parameter	Symbol	Values			Unit
		Min.	Typ.	Max.	
Thermal resistance, junction - ambient	R_{thJA} *4	-	-	41.7	℃/W
	R_{thJC}	-	-	-	℃/W

●Electrical characteristics(T_a = 25℃) ,unless otherwise specified

Parameter	Symbol	Conditions	Values			Unit
			Min.	Typ.	Max.	
Drain - Source breakdown voltage	$V_{(BR)DSS}$	V_{GS} = 0V, I_D = 1mA	40	-	-	V
Breakdown voltage temperature coefficient	$\frac{\Delta V_{(BR)DSS}}{\Delta T_j}$	I_D=1mA referenced to 25℃	-	35	-	mV/℃
Zero gate voltage drain current	I_{DSS}	V_{DS} = 40V, V_{GS} = 0V	-	-	1	μA
Gate - Source leakage current	I_{GSS}	V_{GS} = ±20V, V_{DS} = 0V	-	-	±100	nA
Gate threshold voltage	$V_{GS\ (th)}$	V_{DS} = 10V, I_D = 1mA	1.0	-	2.5	V
Gate threshold voltage temperature coefficient	$\frac{\Delta V_{(GS)th}}{\Delta T_j}$	I_D=1mA referenced to 25℃	-	–3.7	-	mV/℃
Static drain - source on - state resistance	$R_{DS(on)}$ *4	V_{GS}=10V, I_D=18A	-	5.0	7.0	mΩ
		V_{GS}=4.5V, I_D=18A	-	6.7	9.2	
Gate input resistannce	R_G	f = 1MHz, open drain	-	4.1	-	Ω
Transconductance	g_{fs} *4	V_{DS}=10V, I_D=18A	11.0	-	-	S

*1 Limited only by maximum temperature allowed.

*2 Pw ≤ 10μs, Duty cycle ≤ 1%

*3 Mounted on a FR4 (40×40×0.8mm)

*4 Pulsed

© 2012 ROHM Co., Ltd. All rights reserved.

●Electrical characteristics(T_a = 25℃)

Parameter	Symbol	Conditions	Values			Unit
			Min.	Typ.	Max.	
Input capacitance	C_{iss}	V_{GS} = 0V	-	1293	-	pF
Output capacitance	C_{oss}	V_{DS} = 20V	-	307	-	
Reverse transfer capacitance	C_{rss}	f = 1MHz	-	58	-	
Turn - on delay time	$t_{d(on)}$ *4	V_{DD} ≃ 20V, V_{GS} = 10V	-	14.1	-	ns
Rise time	t_r *4	I_D = 9.0A	-	8.9	-	
Turn - off delay time	$t_{d(off)}$ *4	R_L = 2.2Ω	-	48.0	-	
Fall time	t_f *4	R_G = 10Ω	-	8.4	-	

●Gate Charge characteristics(T_a = 25°C)

Parameter	Symbol	Conditions	Values			Unit
			Min.	Typ.	Max.	
Total gate charge	Q_g *4	V_{DD} ≃ 20V, I_D=18A V_{GS} = 10V	-	19.5	-	nC
		V_{DD} ≃ 20V, I_D=18A V_{GS} = 4.5V	-	9.5	-	
Gate - Source charge	Q_{gs} *4		-	3.2	-	
Gate - Drain charge	Q_{gd} *4		-	2.5	-	

●Body diode electrical characteristics (Source-Drain)(T_a = 25℃)

Parameter	Symbol	Conditions	Values			Unit
			Min.	Typ.	Max.	
Inverse diode continuous, forward current	I_S *1	T_a = 25℃	-	-	2.5	A
Forward voltage	V_{SD} *4	V_{GS} = 0V, I_s = 2.5A	-	-	1.2	V

© 2012 ROHM Co., Ltd. All rights reserved.

●Electrical characteristic curves

Fig.1 Power Dissipation Derating Curve

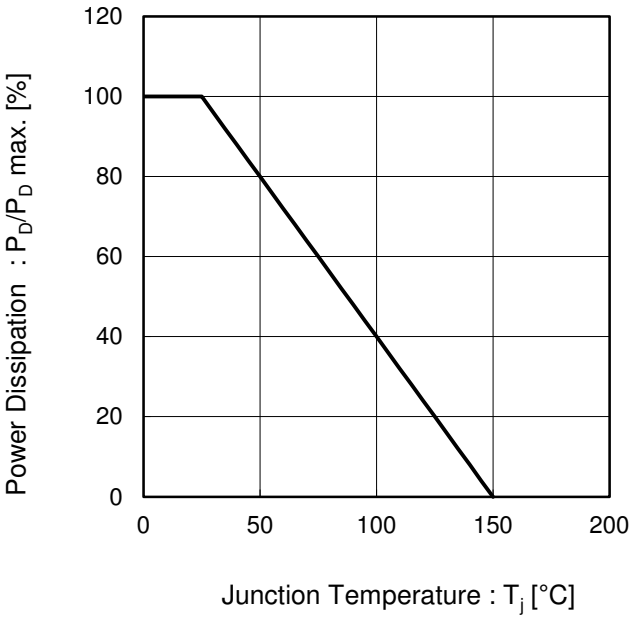

Fig.2 Maximum Safe Operating Area

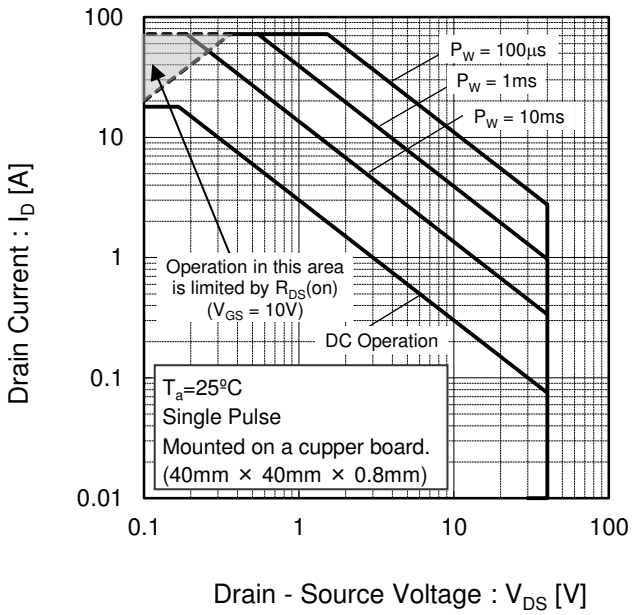

Fig.3 Normalized Transient Thermal Resistance vs. Pulse Width

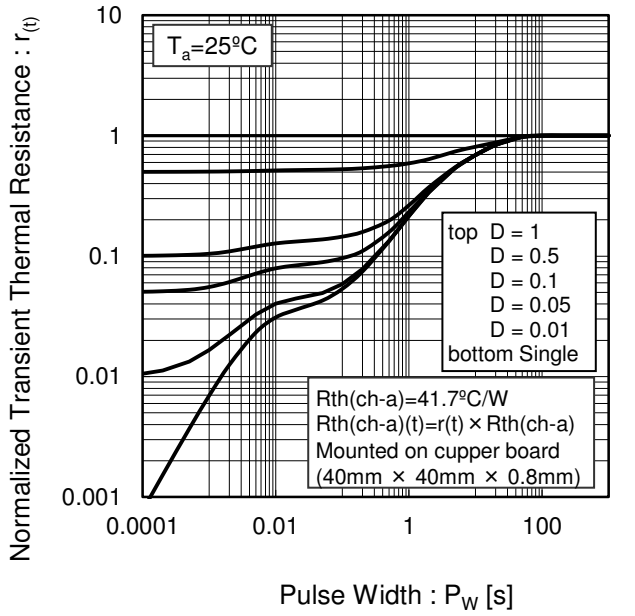

Fig.4 Single Pulse Maxmum Power dissipation

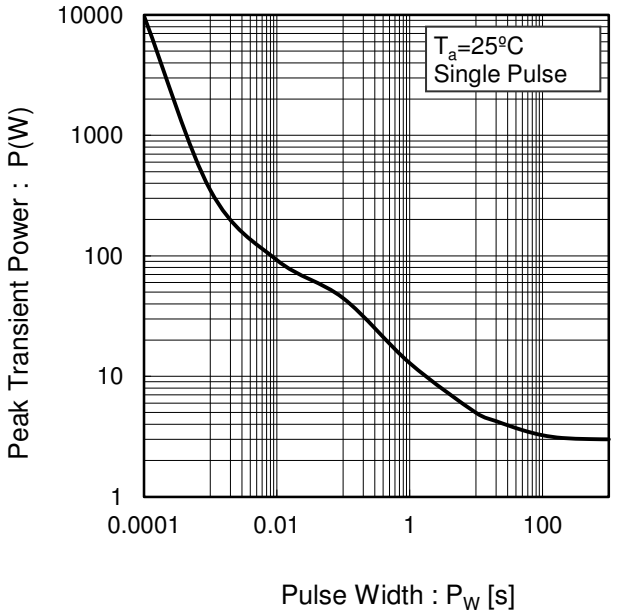

© 2012 ROHM Co., Ltd. All rights reserved.

●Electrical characteristic curves

Fig.5 Typical Output Characteristics(I)

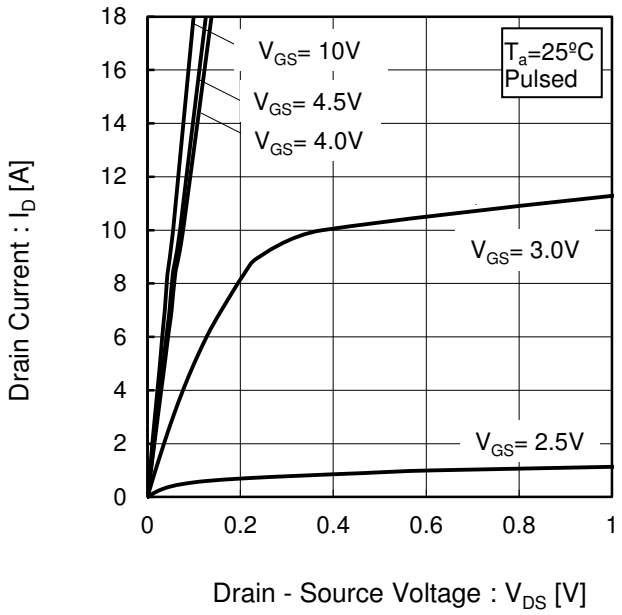

Fig.6 Typical Output Characteristics(II)

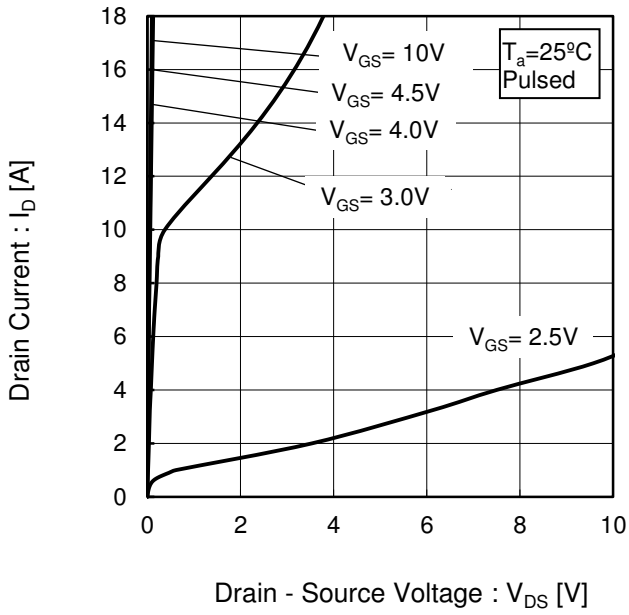

Fig.7 Breakdown Voltage
vs. Junction Temperature

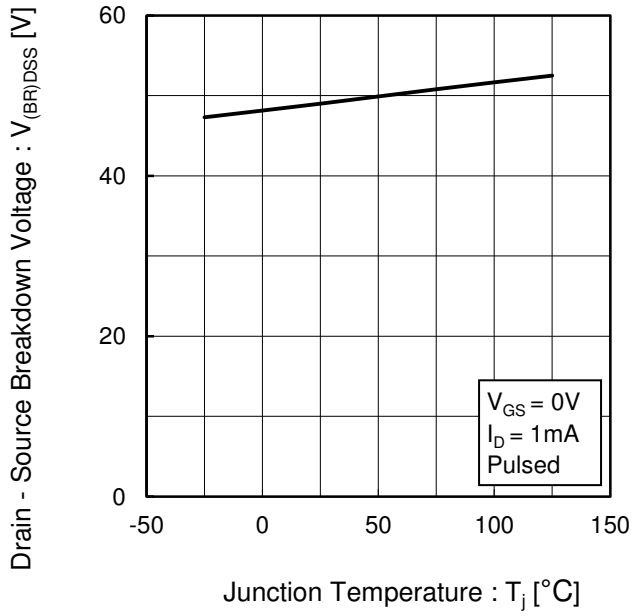

Fig.8 Typical Transfer Characteristics

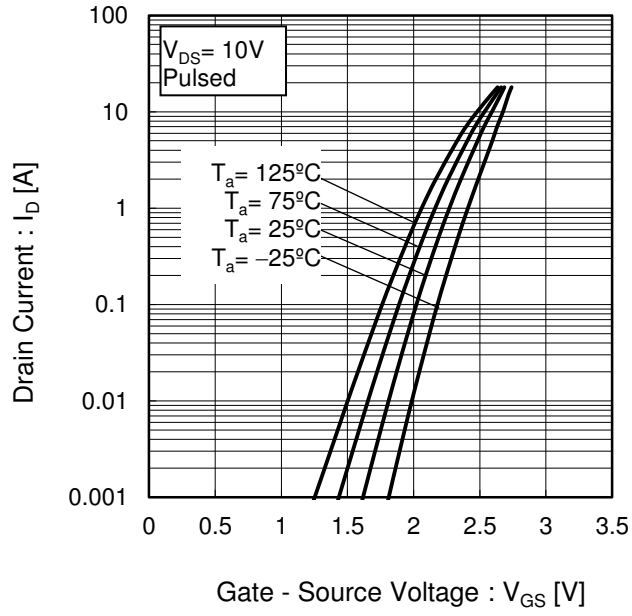

© 2012 ROHM Co., Ltd. All rights reserved.

●Electrical characteristic curves

Fig.9 Gate Threshold Voltage vs. Junction Temperature

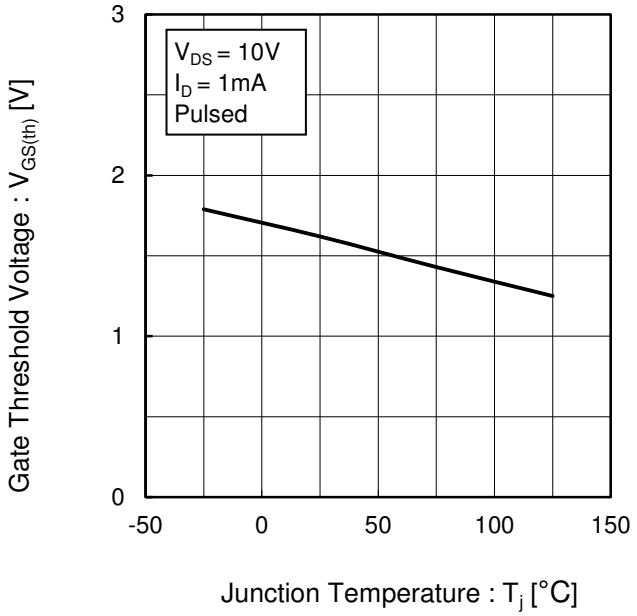

Fig.10 Forward Transfer Admittance vs. Drain Current

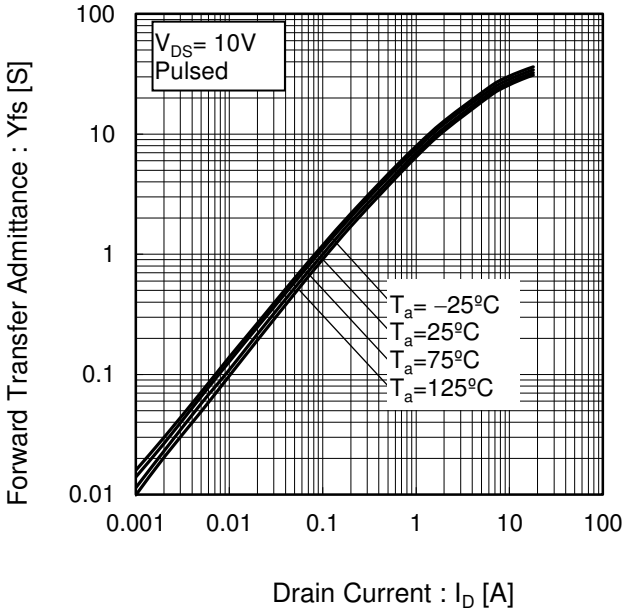

Fig.11 Drain CurrentDerating Curve

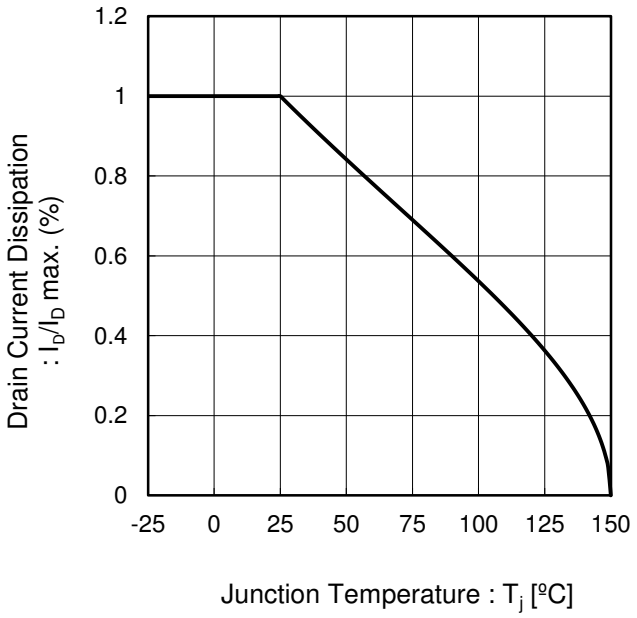

Fig.12 Static Drain - Source On - State Resistance vs. Gate Source Voltage

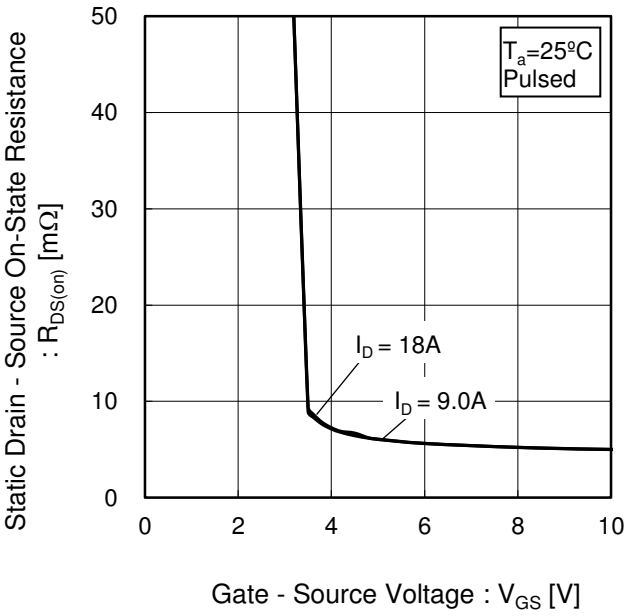

© 2012 ROHM Co., Ltd. All rights reserved.

●Electrical characteristic curves

Fig.13 Static Drain - Source On - State Resistance vs. Drain Current(I)

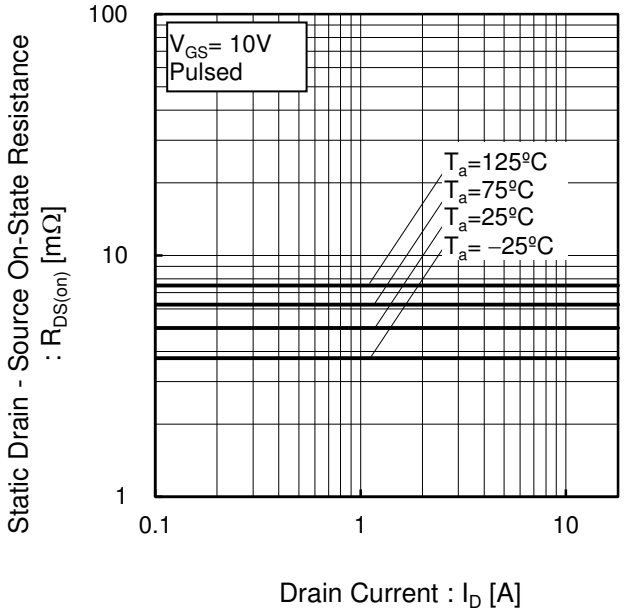

Fig.14 Static Drain - Source On - State Resistance vs. Junction Temperature

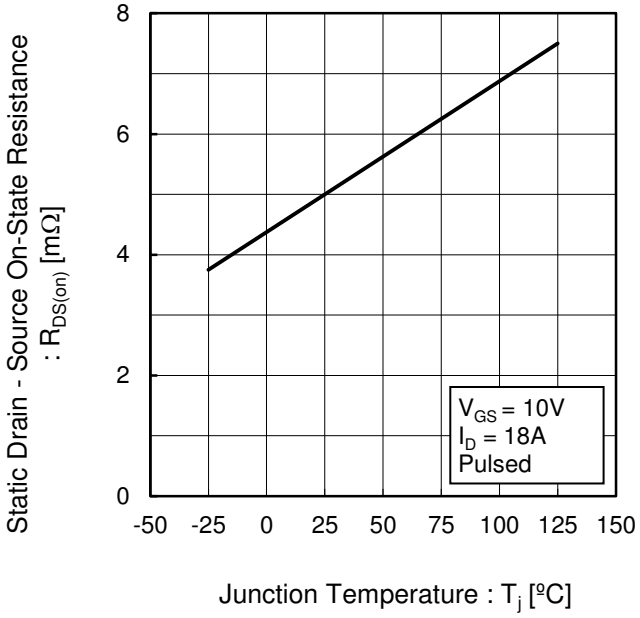

Fig.15 Static Drain - Source On - State Resistance vs. Drain Current(II)

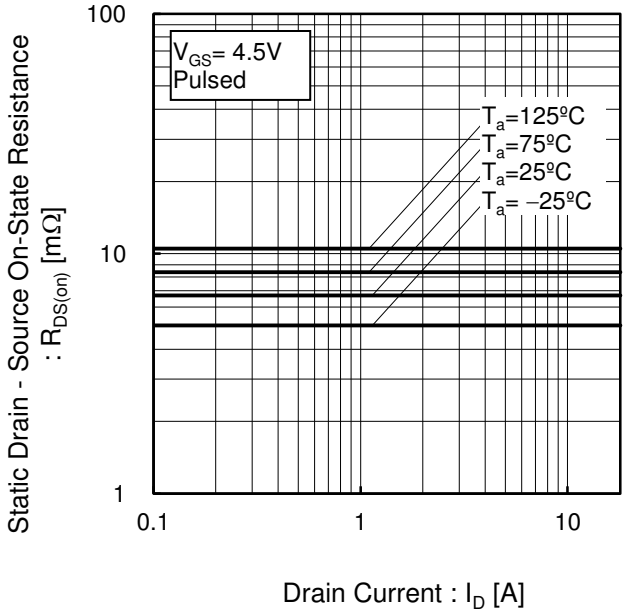

© 2012 ROHM Co., Ltd. All rights reserved.

●Electrical characteristic curves

Fig.16 Typical Capacitance vs. Drain - Source Voltage

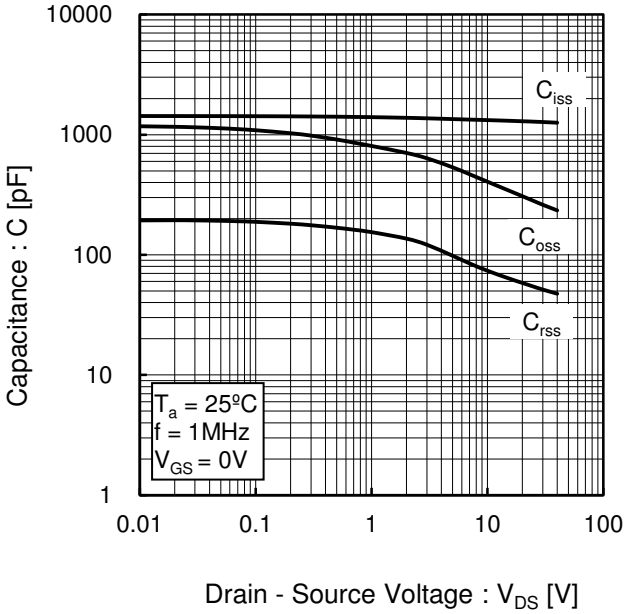

Fig.17 Switching Characteristics

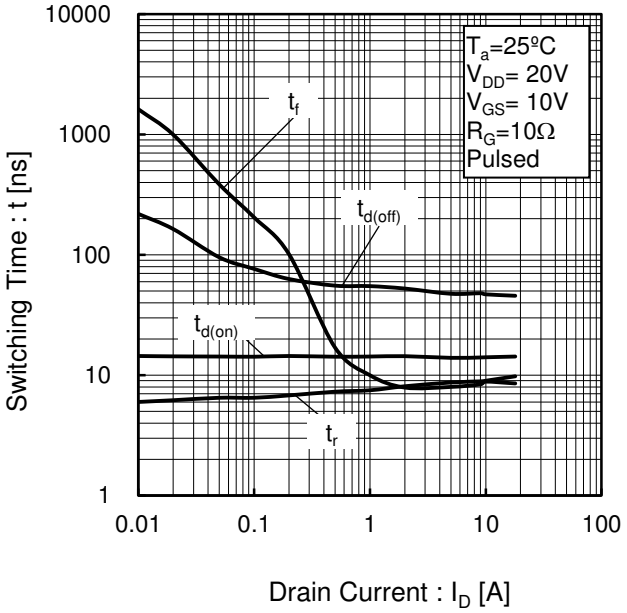

Fig.18 Dynamic Input Characteristics

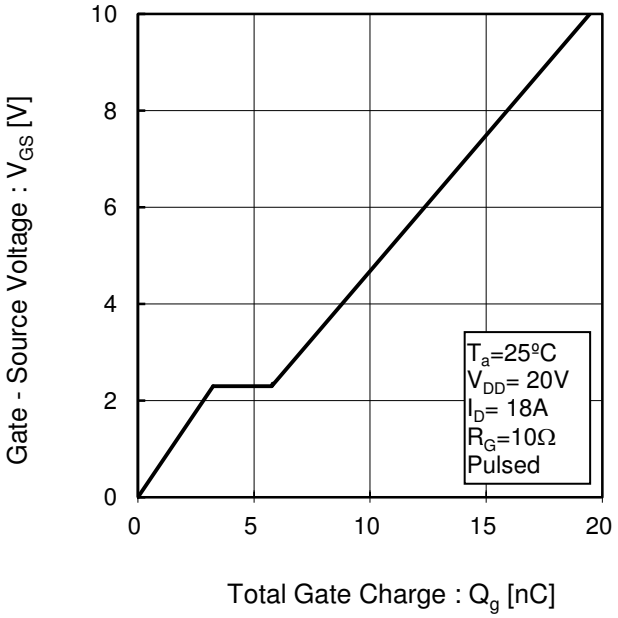

Fig.19 Source Current vs. Source Drain Voltage

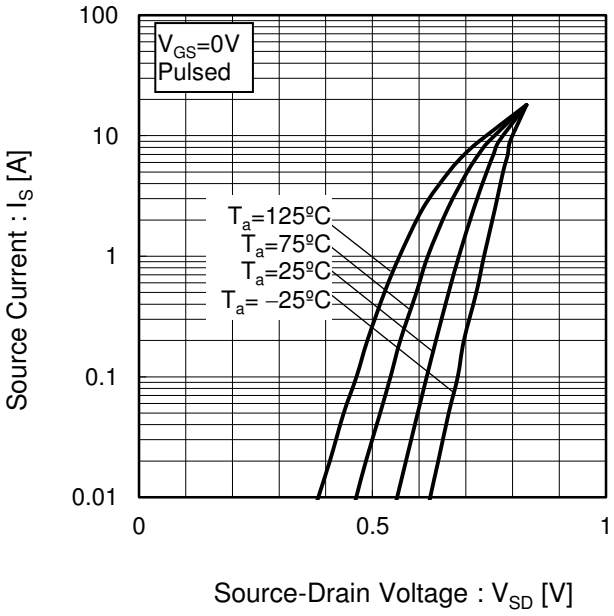

© 2012 ROHM Co., Ltd. All rights reserved.

●Measurement circuits

Fig.1-1 Switching Time Measurement Circuit

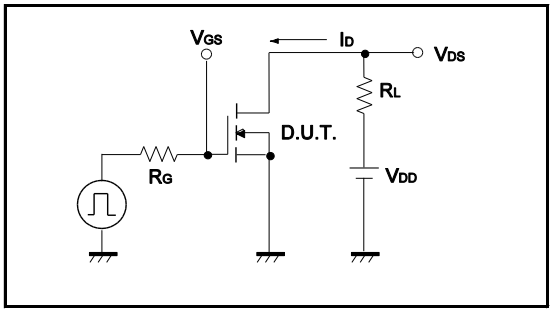

Fig.1-2 Switching Waveforms

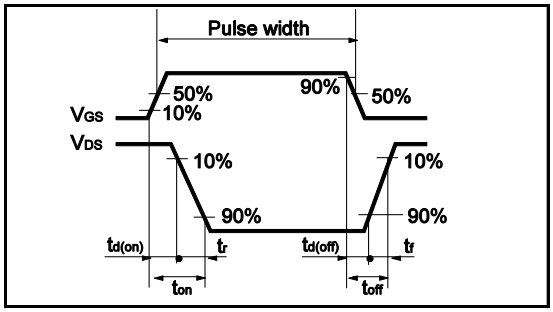

Fig.2-1 Gate Charge Measurement Circuit

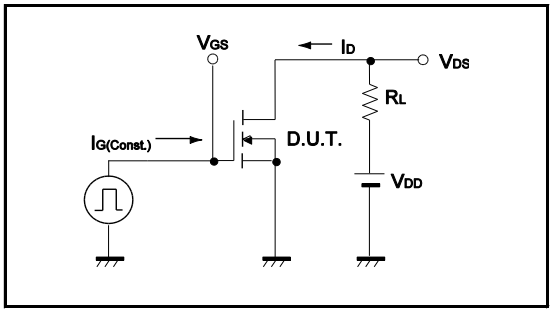

Fig.2-2 Gate Charge Waveform

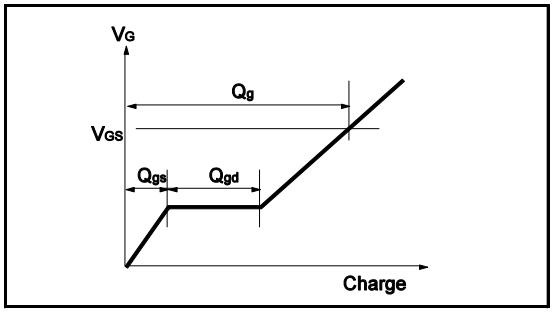

© 2012 ROHM Co., Ltd. All rights reserved.

●**Dimensions** (Unit : mm)

HSOP8

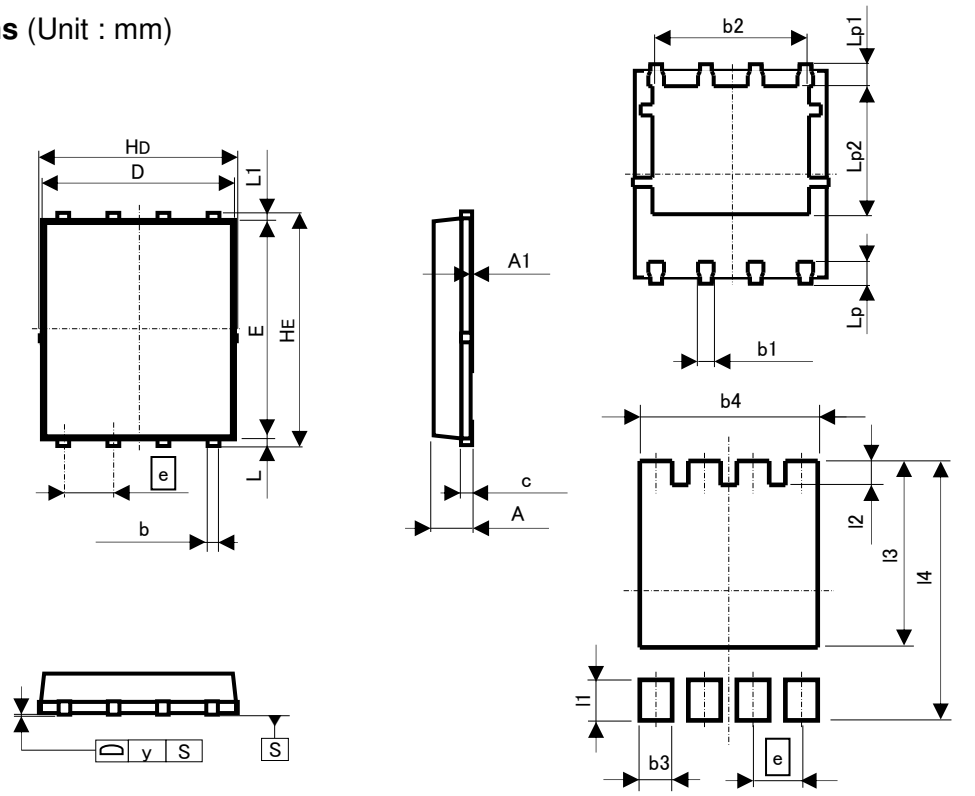

Patterm of terminal position areas

DIM	MILIMETERS		INCHES	
	MIN	MAX	MIN	MAX
A	0.90	1.10	0.035	0.043
A1	0.00	0.05	0.000	0.002
b	0.24	0.42	0.009	0.017
b1	0.29	0.49	0.011	0.019
b2	3.81	4.21	0.150	0.166
c	0.20	0.30	0.008	0.012
D	4.80	5.00	0.189	0.197
E	5.60	5.80	0.220	0.228
e	1.27		0.050	
HD	4.90	5.10	0.193	0.201
HE	5.90	6.10	0.232	0.240
L	0.07	0.25	0.003	0.010
L1	0.07	0.25	0.003	0.010
Lp	0.50	0.70	0.020	0.028
Lp1	0.52	0.72	0.020	0.028
Lp2	3.30	3.70	0.130	0.146
y	-	0.10	0.004	

DIM	MILIMETERS		INCHES	
	MIN	MAX	MIN	MAX
b3	-	0.75	-	0.030
b4	-	4.56	-	0.180
l1	-	1.10	-	0.043
l2	-	0.80	-	0.031
l3	-	4.59	-	0.181
l4	-	6.60	-	0.260

Dimension in mm/inches

© 2012 ROHM Co., Ltd. All rights reserved.

Notes

No copying or reproduction of this document, in part or in whole, is permitted without the consent of ROHM Co.,Ltd.

The content specified herein is subject to change for improvement without notice.

The content specified herein is for the purpose of introducing ROHM's products (hereinafter "Products"). If you wish to use any such Product, please be sure to refer to the specifications, which can be obtained from ROHM upon request.

Examples of application circuits, circuit constants and any other information contained herein illustrate the standard usage and operations of the Products. The peripheral conditions must be taken into account when designing circuits for mass production.

Great care was taken in ensuring the accuracy of the information specified in this document. However, should you incur any damage arising from any inaccuracy or misprint of such information, ROHM shall bear no responsibility for such damage.

The technical information specified herein is intended only to show the typical functions of and examples of application circuits for the Products. ROHM does not grant you, explicitly or implicitly, any license to use or exercise intellectual property or other rights held by ROHM and other parties. ROHM shall bear no responsibility whatsoever for any dispute arising from the use of such technical information.

The Products specified in this document are intended to be used with general-use electronic equipment or devices (such as audio visual equipment, office-automation equipment, communication devices, electronic appliances and amusement devices).

The Products specified in this document are not designed to be radiation tolerant.

While ROHM always makes efforts to enhance the quality and reliability of its Products, a Product may fail or malfunction for a variety of reasons.

Please be sure to implement in your equipment using the Products safety measures to guard against the possibility of physical injury, fire or any other damage caused in the event of the failure of any Product, such as derating, redundancy, fire control and fail-safe designs. ROHM shall bear no responsibility whatsoever for your use of any Product outside of the prescribed scope or not in accordance with the instruction manual.

The Products are not designed or manufactured to be used with any equipment, device or system which requires an extremely high level of reliability the failure or malfunction of which may result in a direct threat to human life or create a risk of human injury (such as a medical instrument, transportation equipment, aerospace machinery, nuclear-reactor controller, fuel-controller or other safety device). ROHM shall bear no responsibility in any way for use of any of the Products for the above special purposes. If a Product is intended to be used for any such special purpose, please contact a ROHM sales representative before purchasing.

If you intend to export or ship overseas any Product or technology specified herein that may be controlled under the Foreign Exchange and the Foreign Trade Law, you will be required to obtain a license or permit under the Law.

ROHM SEMICONDUCTOR

Thank you for your accessing to ROHM product informations.
More detail product informations and catalogs are available, please contact us.

ROHM Customer Support System

http://www.rohm.com/contact/

© 2012 ROHM Co., Ltd. All rights reserved.