Agilent's Four Channel

Signal Analyzer Platform Z2090B-031

System Overview

System Description

The Z2090B-031 Four Channel Signal Analyzer provides signal analysis capability on up to four simultaneous signals up to a 1.5 GHz bandwidth. The FSCA solution leverages the extremely capable 89601A VSA software to provide high frequency (up to 26.5 GHz) measurements with high measurement bandwidth (up to 1.5 GHz).

System Capability

The system enables the user to realize the following benefits:

- Four Channel 26.5GHz Frequency Capability
- 1.5 GHz BW on all Channels
- Coherent Measurement Capability
- 4 Channel Signal Recording
- Time/Frequency/Modulation Domain Measurements

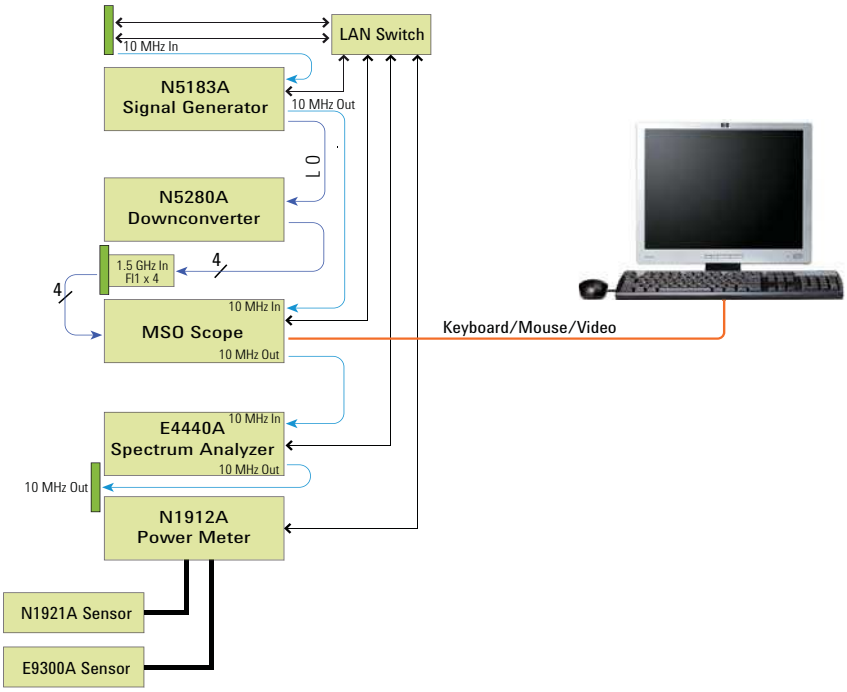

Agilent will tailor the system to specific customer needs

Work directly with Agilent's Aerospace/Defense Systems Team to tailor the platform to meet your requirements:

- Define test plans.
- Optimize hardware and software content
- Define specific content provided by Agilent and content provided by customer.
- Define scope of design and delivery services; ranging from custom design of components, build to print, integration, to full turn-key.
- Define level of services required for installation, training and support.

In the process, benefit from Agilent capabilities:

- World-class measurement science expertise
- Global delivery and support
- Disciplined program and project

Agilent Technologies

System Hardware Building Blocks

The versatile architecture of the Four Channel Analyzer System is built around Agilent instrumentation and analysis software.

RF Instrumentation

- N5280A 4-Channel Frequency Converter. The N5280A provides four down-conversion channels from 10MHz-26.5GHz RF to a 10KHz-1.5GHz IF. All channels share a common Local Oscillator (LO) which allows coherent channel measurement capability.

- MSO9404A Oscilloscope. The high-performance oscilloscope provides A-D conversion of the 4 IF signals from the N5280A and hosts the 89601 VSA software. This oscilloscope provides direct measurements up to 2.5 GHz of bandwidth. This provides the central user interface for the 4VSA solution.

- N5183A Microwave Signal Generator. The N5183A Signal Generator provides a common LO source for the down-converter. The LO source is nominally configured to support the full 26.5 GHz bandwidth.

System Controller

- Controller embedded in the oscilloscope is used as a system controller to provide high performance at no additional system cost.

Interconnect

- Access to system function is via a customizable interface panel as well as the downconverter standar I/O
- The system will operate from a standard 120VAC, 15 Amp circuit. An 8 foot power cord with a 5-15P connector will be provided with the system. In addition a ⅜" ground lug will be provided on the system.

Operator Interface

- 19" LCD and keyboard, either rack mounted or on swing arm.

Rack Hardware

- Agilent standard or 3rd party ruggedized rack, PDU and cooling.

Auxiliary Instrumentation

- E4440A Performance Spectrum Analyzer.
  Provides traditional spectrum analysis viewing of signals for comparison purposes as well as identifying any out of band signals that could potentially cloud the measurements.

- N1912A Power Meter and Sensor.
  Provides method for absolute power measurements of the RF signals.

System Software

The Agilent Aerospace/Defense Systems team provides deep knowledge of test instrumentation and measurement science; and is capable of delivering systems with a wide range of system and measurement software:

- Specific Measurements
- Test Plans
- Self-Test and Calibration available
- Fault Isolation & Troubleshooting Tools
- Automation
- Connections to Factory Floor or Enterprise

System Benefits

- Superior measurement performance with the latest instrumentation and technologies from Agilent.
- Flexible hardware architecture for characterization, manufacturing and repair.
- Fast development time through use of a standardized test platform.
- Defined support processes: Instrument self-test, Calibration, and System sanitization.
- Lower Cost of Test from use of COTS equipment

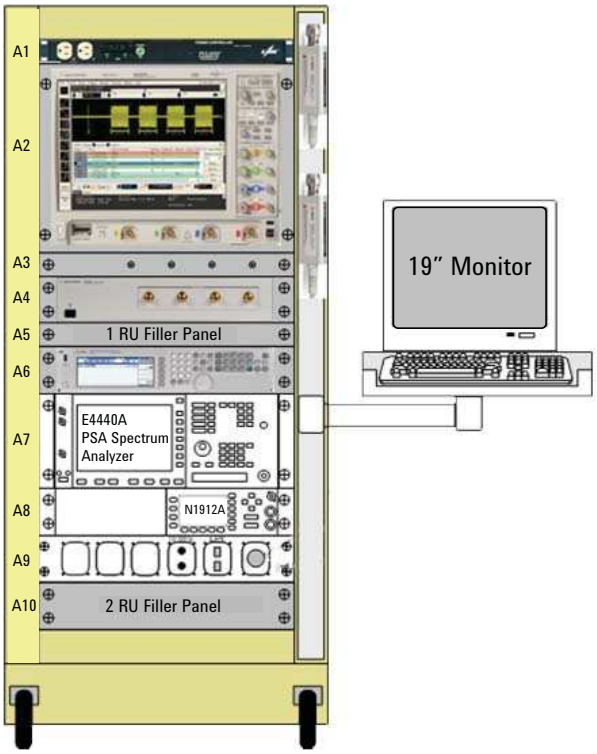

www.agilent.com
www.agilent.com/find/adsystem

Agilent Email Updates

www.agilent.com/find/emailupdates
Get the latest information on the products and applications you select.

LXI

www.lxistandard.org
LXI is the LAN-based successor to GPIB, providing faster, more efficient connectivity. Agilent is a founding member of the LXI consortium.

Agilent Channel Partners

www.agilent.com/find/channelpartners
Get the best of both worlds: Agilent's measurement expertise and product breadth, combined with channel partner convenience.

Remove all doubt

Our repair and calibration services will get your equipment back to you, performing like new, when promised. You will get full value out of your Agilent equipment throughout its lifetime. Your equipment will be serviced by Agilent-trained technicians using the latest factory calibration procedures, automated repair diagnostics and genuine parts. You will always have the utmost confidence in your measurements. For information regarding self maintenance of this product, please contact your Agilent office.

Agilent offers a wide range of additional expert test and measurement services for your equipment, including initial start-up assistance, onsite education and training, as well as design, system integration, and project management.

For more information on repair and calibration services, go to:

www.agilent.com/find/removealldoubt

For more information on Agilent Technologies' products, applications or services, please contact your local Agilent office. The complete list is available at:

www.agilent.com/find/contactus

Americas

Canada	(877) 894 4414
Latin America	305 269 7500
United States	(800) 829 4444

Asia Pacific

Australia	1 800 629 485
China	800 810 0189
Hong Kong	800 938 693
India	1 800 112 929
Japan	0120 (421) 345
Korea	080 769 0800
Malaysia	1 800 888 848
Singapore	1 800 375 8100
Taiwan	0800 047 866
Thailand	1 800 226 008

Europe & Middle East

Austria	43 (0) 1 360 277 1571
Belgium	32 (0) 2 404 93 40
Denmark	45 70 13 15 15
Finland	358 (0) 10 855 2100
France	0825 010 700*
	*0.125 €/minute
Germany	49 (0) 7031 464 6333
Ireland	1890 924 204
Israel	972-3-9288-504/544
Italy	39 02 92 60 8484
Netherlands	31 (0) 20 547 2111
Spain	34 (91) 631 3300
Sweden	0200-88 22 55
Switzerland	0800 80 53 53
United Kingdom	44 (0) 118 9276201

Other European Countries:
www.agilent.com/find/contactus
Revised: October 1, 2009

Product specifications and descriptions in this document subject to change without notice.

© Agilent Technologies, Inc. 2009

Printed in USA, February 19, 2010
5990-5076EN

Agilent Technologies