TOSHIBA CMOS Digital Integrated Circuit Silicon Monolithic

TC74VHC125F,TC74VHC125FT,TC74VHC125FK
TC74VHC126F,TC74VHC126FT,TC74VHC126FK

TC74VHC125F/FT/FK Quad Bus Buffer

TC74VHC126F/FT/FK Quad Bus Buffer

The TC74VHC125/126 are high speed CMOS QUAD BUS BUFFERs fabricated with silicon gate C^2MOS technology.

They achieve the high speed operation similar to equivalent Bipolar Shottky TTL while maintaining the CMOS low power dissipation.

The TC74VHC125 requires the 3-state control input $\overline{G}$ to be set high to place the output into the high impedance state, whereas the TC74VHC126 requires the control input G to be set low to place the output into high impedance.

An input protection circuit ensures that 0 to 5.5 V can be applied to the input pins without regard to the supply voltage. This device can be used to interface 5 V to 3 V systems and two supply systems such as battery back up.

This circuit prevents device destruction due to mismatched supply and input voltages.

TC74VHC125F, TC74VHC126F

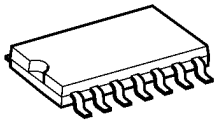

SOP14-P-300-1.27A

TC74VHC125FT, TC74VHC126FT

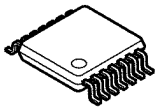

TSSOP14-P-0044-0.65A

TC74VHC125FK, TC74VHC126FK

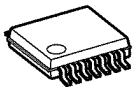

VSSOP14-P-0030-0.50

Features

- High speed: t_{pd} = 3.8 ns (typ.) at V_{CC} = 5 V
- Low power dissipation: I_{CC} = 4 μA (max) at Ta = 25°C
- High noise immunity: $V_{NIH} = V_{NIL}$ = 28% V_{CC} (min)
- Power down protection is provided on all inputs.
- Balanced propagation delays: $t_{pLH} \simeq t_{pHL}$
- Wide operating voltage range: $V_{CC\ (opr)}$ = 2 to 5.5 V
- Low noise: V_{OLP} = 0.8 V (max)
- Pin and function compatible with 74ALS125/126

Weight

SOP14-P-300-1.27A	: 0.18 g (typ.)
TSSOP14-P-0044-0.65A	: 0.06 g (typ.)
VSSOP14-P-0030-0.50	: 0.02 g (typ.)

Pin Assignment

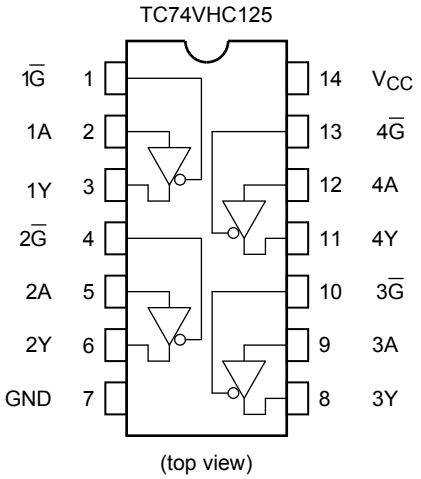

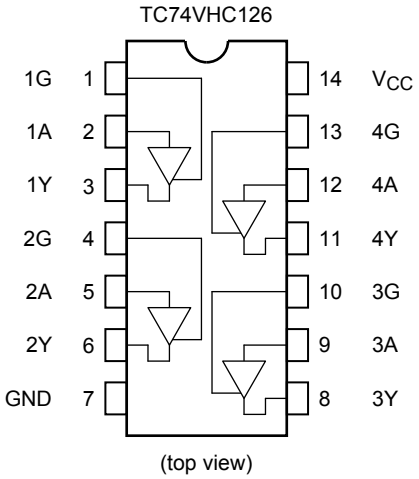

IEC Logic Symbol

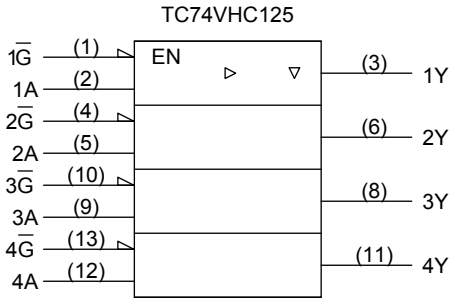

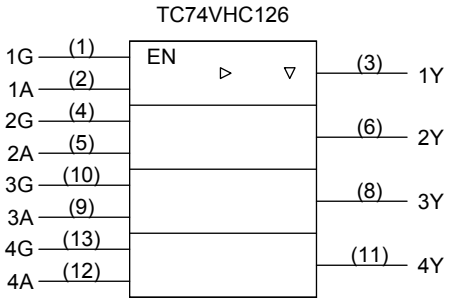

Truth Table

TC74VHC125

Inputs		Output
$\overline{G}$	A	Y
H	X	Z
L	L	L
L	H	H

X: Don’t care

Z: High impedance

TC74VHC126

Inputs		Output
G	A	Y
L	X	Z
H	L	L
H	H	H

X: Don’t care

Z: High impedance

Absolute Maximum Ratings (Note)

Characteristics	Symbol	Rating	Unit
Supply voltage range	V_{CC}	−0.5 to 7.0	V
DC input voltage	V_{IN}	−0.5 to 7.0	V
DC output voltage	V_{OUT}	−0.5 to V_{CC} + 0.5	V
Input diode current	I_{IK}	−20	mA
Output diode current	I_{OK}	±20	mA
DC output current	I_{OUT}	±25	mA
DC V_{CC}/ground current	I_{CC}	±50	mA
Power dissipation	P_D	180	mW
Storage temperature	T_{stg}	−65 to 150	°C

Note: Exceeding any of the absolute maximum ratings, even briefly, lead to deterioration in IC performance or even destruction.
Using continuously under heavy loads (e.g. the application of high temperature/current/voltage and the significant change in temperature, etc.) may cause this product to decrease in the reliability significantly even if the operating conditions (i.e. operating temperature/current/voltage, etc.) are within the absolute maximum ratings and the operating ranges.
Please design the appropriate reliability upon reviewing the Toshiba Semiconductor Reliability Handbook ("Handling Precautions"/"Derating Concept and Methods") and individual reliability data (i.e. reliability test report and estimated failure rate, etc).

Operating Ranges (Note)

Characteristics	Symbol	Rating	Unit
Supply voltage	V_{CC}	2.0 to 5.5	V
Input voltage	V_{IN}	0 to 5.5	V
Output voltage	V_{OUT}	0 to V_{CC}	V
Operating temperature	T_{opr}	−40 to 85	°C
Input rise and fall time	dt/dv	0 to 100 (V_{CC} = 3.3 ± 0.3 V) 0 to 20 (V_{CC} = 5 ± 0.5 V)	ns/V

Note: The operating ranges must be maintained to ensure the normal operation of the device.
Unused inputs must be tied to either VCC or GND.

Electrical Characteristics

DC Characteristics

Characteristics	Symbol	Test Condition		V_{CC} (V)	Ta = 25°C Min	Ta = 25°C Typ.	Ta = 25°C Max	Ta = −40 to 85°C Min	Ta = −40 to 85°C Max	Unit
High-level input voltage	V_{IH}	—		2.0	1.50	—	—	1.50	—	V
				3.0 to 5.5	V_{CC} × 0.7	—	—	V_{CC} × 0.7	—	
Low-level input voltage	V_{IL}	—		2.0	—	—	0.50	—	0.50	V
				3.0 to 5.5	—	—	V_{CC} × 0.3	—	V_{CC} × 0.3	
High-level output voltage	V_{OH}	V_{IN} = V_{IH} or V_{IL}	I_{OH} = −50 μA	2.0	1.9	2.0	—	1.9	—	V
				3.0	2.9	3.0	—	2.9	—	
				4.5	4.4	4.5	—	4.4	—	
			I_{OH} = −4 mA	3.0	2.58	—	—	2.48	—	
			I_{OH} = −8 mA	4.5	3.94	—	—	3.80	—	
Low-level output voltage	V_{OL}	V_{IN} = V_{IH} or V_{IL}	I_{OL} = 50 μA	2.0	—	0.0	0.1	—	0.1	V
				3.0	—	0.0	0.1	—	0.1	
				4.5	—	0.0	0.1	—	0.1	
			I_{OL} = 4 mA	3.0	—	—	0.36	—	0.44	
			I_{OL} = 8 mA	4.5	—	—	0.36	—	0.44	
3-state output off-state current	I_{OZ}	V_{IN} = V_{IH} or V_{IL} V_{OUT} = V_{CC} or GND		5.5	—	—	±0.25	—	±2.50	μA
Input leakage current	I_{IN}	V_{IN} = 5.5 V or GND		0 to 5.5	—	—	±0.1	—	±1.0	μA
Quiescent supply current	I_{CC}	V_{IN} = V_{CC} or GND		5.5	—	—	4.0	—	40.0	μA

AC Characteristics (input: $t_r = t_f = 3$ ns)

Characteristics	Symbol	Test Condition			Ta = 25°C			Ta = −40 to 85°C		Unit
			V_{CC} (V)	C_L (pF)	Min	Typ.	Max	Min	Max	
Propagation delay time	t_{pLH} t_{pHL}	—	3.3 ± 0.3	15	—	5.6	8.0	1.0	9.5	ns
				50	—	8.1	11.5	1.0	13.0	
			5.0 ± 0.5	15	—	3.8	5.5	1.0	6.5	
				50	—	5.3	7.5	1.0	8.5	
Output enable time	t_{pZL} t_{pZH}	R_L = 1 kΩ	3.3 ± 0.3	15	—	5.4	8.0	1.0	9.5	ns
				50	—	7.9	11.5	1.0	13.0	
			5.0 ± 0.5	15	—	3.6	5.1	1.0	6.0	
				50	—	5.1	7.1	1.0	8.0	
Output disable time	t_{pLZ} t_{pHZ}	R_L = 1 kΩ	3.3 ± 0.3	50	—	9.5	13.2	1.0	15.0	ns
			5.0 ± 0.5	50	—	6.1	8.8	1.0	10.0	
Output to output skew	t_{osLH} t_{osHL}	(Note 1)	3.3 ± 0.3	50	—	—	1.5	—	1.5	ns
			5.0 ± 0.5	50	—	—	1.0	—	1.0	
Input capacitance	C_{IN}	—			—	4	10	—	10	pF
Output capacitance	C_{OUT}	—			—	6	—	—	—	pF
Power dissipation capacitance (Note 2)	C_{PD}	TC74VHC125			—	14	—	—	—	pF
		TC74VHC126			—	15	—	—	—	

Note 1: Parameter guaranteed by design.

$t_{osLH} = |t_{pLHm} - t_{pLHn}|$, $t_{osHL} = |t_{pHLm} - t_{pHLn}|$

Note 2: C_{PD} is defined as the value of the internal equivalent capacitance which is calculated from the operating current consumption without load.

Average operating current can be obtained by the equation:

$I_{CC\ (opr)} = C_{PD} \cdot V_{CC} \cdot f_{IN} + I_{CC}/4$ (per gate)

Noise Characteristics (input: $t_r = t_f = 3$ ns)

Characteristics	Symbol	Test Condition		Ta = 25°C		Unit
			V_{CC} (V)	Typ.	Limit	
Quiet output maximum dynamic V_{OL}	V_{OLP}	C_L = 50 pF	5.0	0.3	0.8	V
Quiet output minimum dynamic V_{OL}	V_{OLV}	C_L = 50 pF	5.0	−0.3	−0.8	V
Minimum high level dynamic input voltage	V_{IHD}	C_L = 50 pF	5.0	—	3.5	V
Maximum low level dynamic input voltage	V_{ILD}	C_L = 50 pF	5.0	—	1.5	V

Input Equivalent Circuit

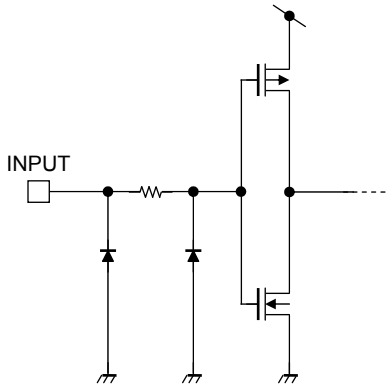

Package Dimensions

SOP14-P-300-1.27A Unit: mm

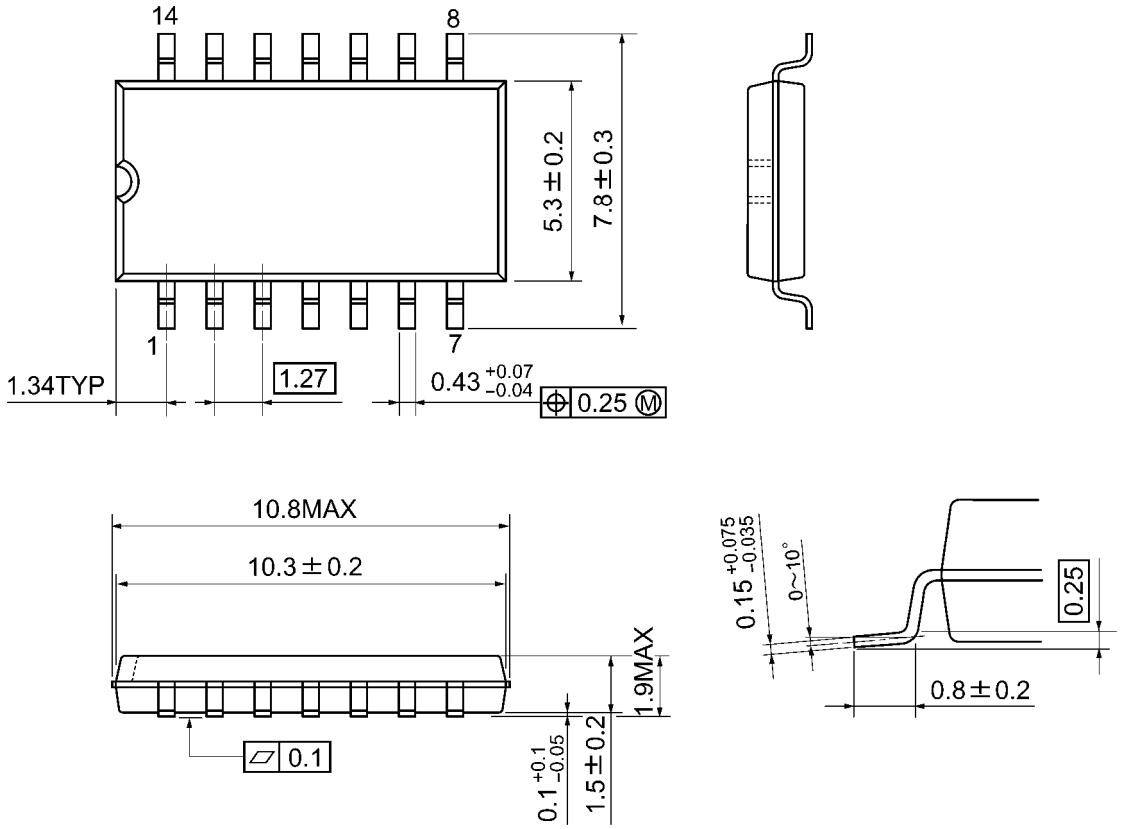

Weight: 0.18 g (typ.)

Package Dimensions

TSSOP14-P-0044-0.65A Unit: mm

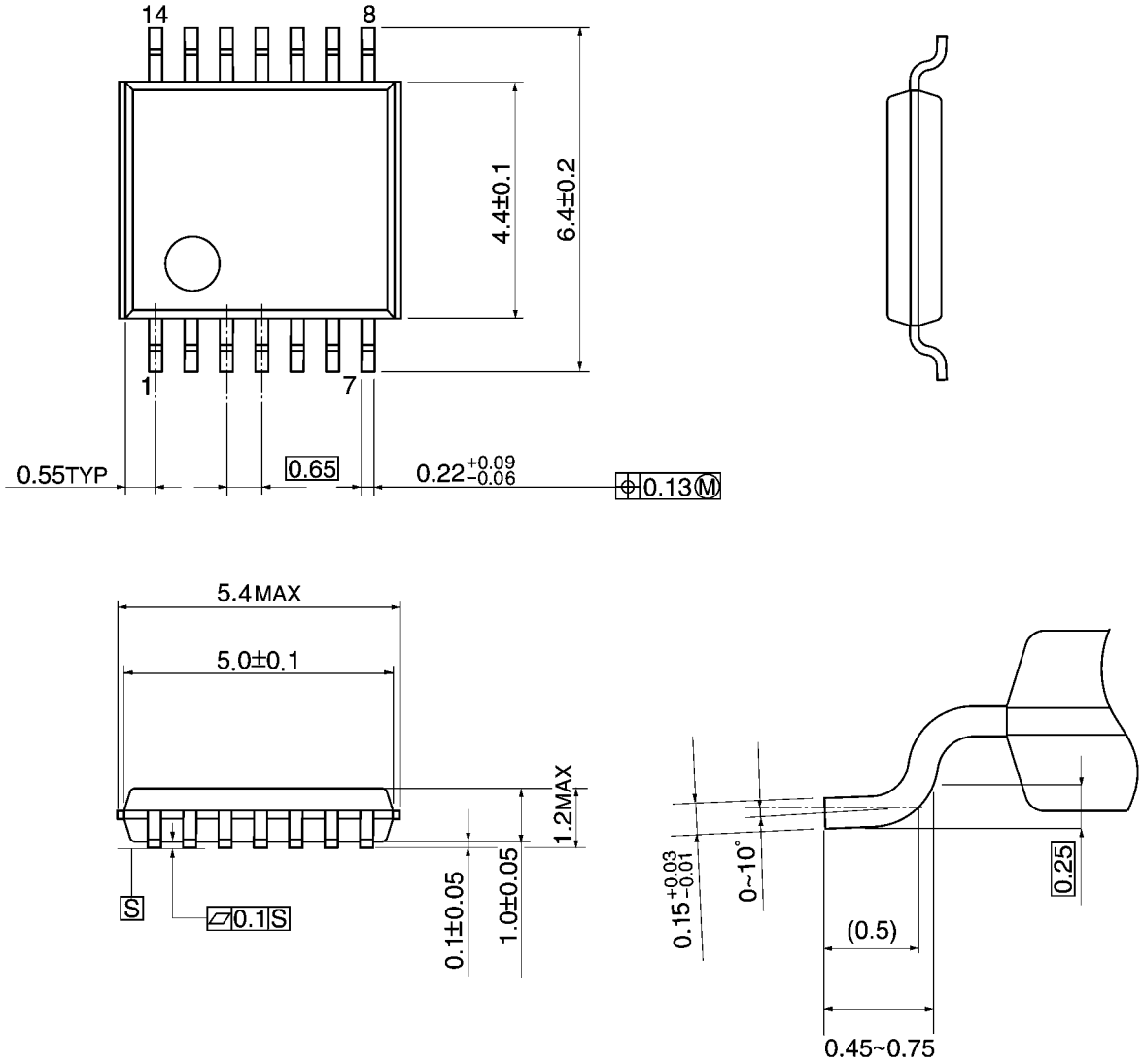

Weight: 0.06 g (typ.)

Package Dimensions

VSSOP14-P-0030-0.50 Unit: mm

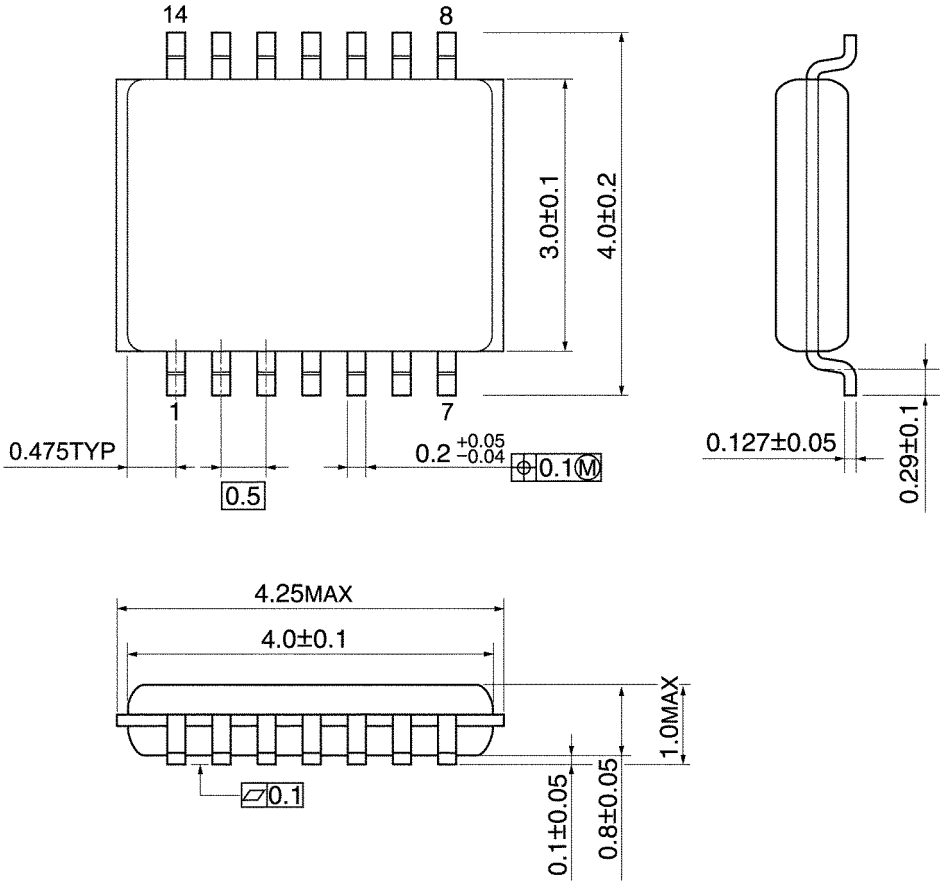

Weight: 0.02 g (typ.)

RESTRICTIONS ON PRODUCT USE

- Toshiba Corporation, and its subsidiaries and affiliates (collectively "TOSHIBA"), reserve the right to make changes to the information in this document, and related hardware, software and systems (collectively "Product") without notice.
- This document and any information herein may not be reproduced without prior written permission from TOSHIBA. Even with TOSHIBA's written permission, reproduction is permissible only if reproduction is without alteration/omission.
- Though TOSHIBA works continually to improve Product's quality and reliability, Product can malfunction or fail. Customers are responsible for complying with safety standards and for providing adequate designs and safeguards for their hardware, software and systems which minimize risk and avoid situations in which a malfunction or failure of Product could cause loss of human life, bodily injury or damage to property, including data loss or corruption. Before customers use the Product, create designs including the Product, or incorporate the Product into their own applications, customers must also refer to and comply with (a) the latest versions of all relevant TOSHIBA information, including without limitation, this document, the specifications, the data sheets and application notes for Product and the precautions and conditions set forth in the "TOSHIBA Semiconductor Reliability Handbook" and (b) the instructions for the application with which the Product will be used with or for. Customers are solely responsible for all aspects of their own product design or applications, including but not limited to (a) determining the appropriateness of the use of this Product in such design or applications; (b) evaluating and determining the applicability of any information contained in this document, or in charts, diagrams, programs, algorithms, sample application circuits, or any other referenced documents; and (c) validating all operating parameters for such designs and applications. **TOSHIBA ASSUMES NO LIABILITY FOR CUSTOMERS' PRODUCT DESIGN OR APPLICATIONS.**
- **PRODUCT IS NEITHER INTENDED NOR WARRANTED FOR USE IN EQUIPMENTS OR SYSTEMS THAT REQUIRE EXTRAORDINARILY HIGH LEVELS OF QUALITY AND/OR RELIABILITY, AND/OR A MALFUNCTION OR FAILURE OF WHICH MAY CAUSE LOSS OF HUMAN LIFE, BODILY INJURY, SERIOUS PROPERTY DAMAGE AND/OR SERIOUS PUBLIC IMPACT ("UNINTENDED USE").** Except for specific applications as expressly stated in this document, Unintended Use includes, without limitation, equipment used in nuclear facilities, equipment used in the aerospace industry, medical equipment, equipment used for automobiles, trains, ships and other transportation, traffic signaling equipment, equipment used to control combustions or explosions, safety devices, elevators and escalators, devices related to electric power, and equipment used in finance-related fields. **IF YOU USE PRODUCT FOR UNINTENDED USE, TOSHIBA ASSUMES NO LIABILITY FOR PRODUCT.** For details, please contact your TOSHIBA sales representative.
- Do not disassemble, analyze, reverse-engineer, alter, modify, translate or copy Product, whether in whole or in part.
- Product shall not be used for or incorporated into any products or systems whose manufacture, use, or sale is prohibited under any applicable laws or regulations.
- The information contained herein is presented only as guidance for Product use. No responsibility is assumed by TOSHIBA for any infringement of patents or any other intellectual property rights of third parties that may result from the use of Product. No license to any intellectual property right is granted by this document, whether express or implied, by estoppel or otherwise.
- **ABSENT A WRITTEN SIGNED AGREEMENT, EXCEPT AS PROVIDED IN THE RELEVANT TERMS AND CONDITIONS OF SALE FOR PRODUCT, AND TO THE MAXIMUM EXTENT ALLOWABLE BY LAW, TOSHIBA (1) ASSUMES NO LIABILITY WHATSOEVER, INCLUDING WITHOUT LIMITATION, INDIRECT, CONSEQUENTIAL, SPECIAL, OR INCIDENTAL DAMAGES OR LOSS, INCLUDING WITHOUT LIMITATION, LOSS OF PROFITS, LOSS OF OPPORTUNITIES, BUSINESS INTERRUPTION AND LOSS OF DATA, AND (2) DISCLAIMS ANY AND ALL EXPRESS OR IMPLIED WARRANTIES AND CONDITIONS RELATED TO SALE, USE OF PRODUCT, OR INFORMATION, INCLUDING WARRANTIES OR CONDITIONS OF MERCHANTABILITY, FITNESS FOR A PARTICULAR PURPOSE, ACCURACY OF INFORMATION, OR NONINFRINGEMENT.**
- Do not use or otherwise make available Product or related software or technology for any military purposes, including without limitation, for the design, development, use, stockpiling or manufacturing of nuclear, chemical, or biological weapons or missile technology products (mass destruction weapons). Product and related software and technology may be controlled under the applicable export laws and regulations including, without limitation, the Japanese Foreign Exchange and Foreign Trade Law and the U.S. Export Administration Regulations. Export and re-export of Product or related software or technology are strictly prohibited except in compliance with all applicable export laws and regulations.
- Please contact your TOSHIBA sales representative for details as to environmental matters such as the RoHS compatibility of Product. Please use Product in compliance with all applicable laws and regulations that regulate the inclusion or use of controlled substances, including without limitation, the EU RoHS Directive. **TOSHIBA ASSUMES NO LIABILITY FOR DAMAGES OR LOSSES OCCURRING AS A RESULT OF NONCOMPLIANCE WITH APPLICABLE LAWS AND REGULATIONS.**