TOSHIBA CMOS Digital Integrated Circuit Silicon Monolithic

# TC7USB31FK

## Dual SPST USB Switch

TC7USB31 is high-speed CMOS dual SPST USB Switch. The low ON- resistance and the low capacitance of the switch allow connections to USB application.

The TC7USB31 requires the output enable ($\overline{OE}$) input to be set high to place the output into the high impedance.

All inputs are equipped with protection circuits against static discharge.

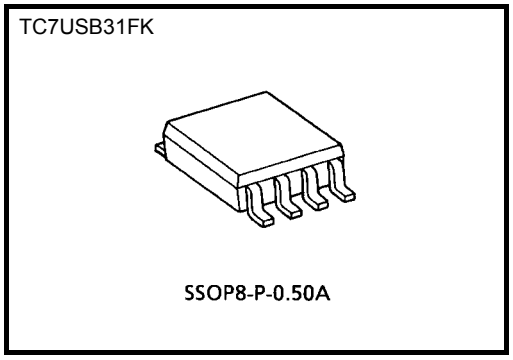


Weight
SSOP8-P-0.50A : 0.01 g (typ)

## Features

- Operating voltage: $V_{CC}$ = 2.3 to 3.6 V
- ON-capacitance: $C_{I/O}$ = 4 pF Switch ON (typ.)@$V_{CC}$ = 3.3 V
- ON-resistance: $R_{ON}$ = 4.5 Ω (typ.) @$V_{CC}$ = 3 V, $V_{I/O}$ = 0 V
- $R_{ON}$ Flatness: $R_{ON(flat)}$ = 1.2 Ω (typ.) @$V_{CC}$ = 3 V
- Delta $R_{ON}$: $\Delta R_{ON}$ = 0.5 Ω (typ.) @$V_{CC}$ = 3 V
- ESD performance: Machine model ≥ ± 200V
  Human body model ≥ ± 2000V
- Power-down protection for inputs ($\overline{OE}$ and I/O)
- Package : US8

## Pin Assignment (top view)

FK (SSOP8-P-0.50A)

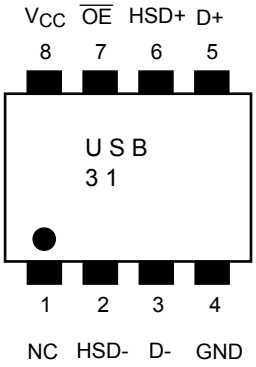

## Truth Table

| Inputs | Function |
|---|---|
| $\overline{OE}$ | |
| L | A port = B port |
| H | Disconnect |

## System Diagram

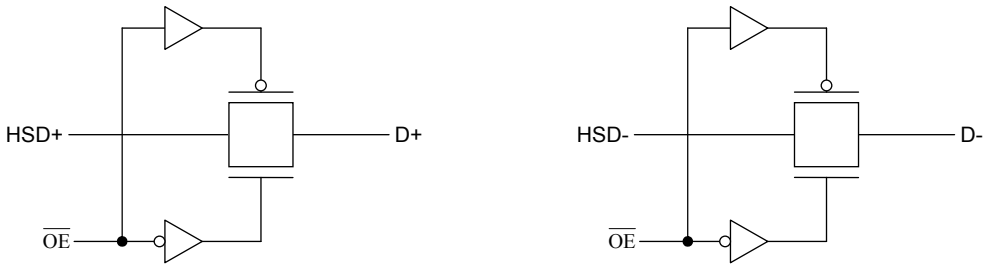

## Absolute Maximum Ratings (Note)

| Characteristic | | Symbol | Rating | Unit |
|---|---|---|---|---|
| Power supply range | | $V_{CC}$ | −0.5 to 4.6 | V |
| Control pin input voltage ( $\overline{OE}$ ) | | $V_{IN}$ | −0.5 to 4.6 | V |
| Switch terminal I/O voltage | $V_{CC}$=0V or Switch=Off | $V_S$ | −0.5 to 4.6 | V |
| | Switch=On | | −0.5 to $V_{CC}$+0.5 | |
| Clump diode current | Control input | $I_{IK}$ | −50 | mA |
| | Switch | | ±50 | |
| Switch I/O current | | $I_S$ | 50 | mA |
| Power dissipation | | $P_D$ | 200 | mW |
| DC $V_{CC}$/GND current | | $I_{CC}/I_{GND}$ | ±100 | mA |
| Storage temperature | | $T_{stg}$ | −65 to 150 | °C |

Note: Exceeding any of the absolute maximum ratings, even briefly, lead to deterioration in IC performance or even destruction. Using continuously under heavy loads (e.g. the application of high temperature/current/voltage and the significant change in temperature, etc.) may cause this product to decrease in the reliability significantly even if the operating conditions (i.e. operating temperature/current/voltage, etc.) are within the absolute maximum ratings and the operating ranges.
Please design the appropriate reliability upon reviewing the Toshiba Semiconductor Reliability Handbook ("Handling Precautions"/"Derating Concept and Methods") and individual reliability data (i.e. reliability test report and estimated failure rate, etc).

## Operating Ranges (Note)

| Characteristic | | Symbol | Rating | Unit |
|---|---|---|---|---|
| Power supply voltage | | $V_{CC}$ | 2.3 to 3.6 | V |
| Control pin input voltage ( $\overline{OE}$ ) | | $V_{IN}$ | 0 to 3.6 | V |
| Switch I/O voltage | $V_{CC}$=0V or Switch=Off | $V_S$ | 0 to 3.6 | V |
| | Switch=On | | 0 to $V_{CC}$ | |
| Operating temperature | | $T_{opr}$ | −40 to 85 | °C |
| Input rise and fall time | | dt/dv | 0 to 10 | ns/V |

Note: The operating ranges must be maintained to ensure the normal operation of the device.Unused inputs must be tied to either $V_{CC}$ or GND.

## Electrical Characteristics

### DC Characteristics (Ta = –40 to 85°C)

| Characteristics | | Symbol | Test Condition | $V_{CC}$ (V) | Min | Typ. | Max | Unit |
|---|---|---|---|---|---|---|---|---|
| Input voltage ( $\overline{OE}$ ) | "H" level | $V_{IH}$ | — | 2.3 to 3.6 | 0.46 × $V_{CC}$ | — | — | V |
| | "L" level | $V_{IL}$ | — | 2.3 to 3.6 | — | — | 0.25 × $V_{CC}$ | |
| Input leakage current ( $\overline{OE}$ ) | | $I_{IN}$ | $V_{IN}$ = 0 to 3.6 V | 2.3 to 3.6 | — | — | ±1.0 | μA |
| Power-off leakage current | | $I_{OFF}$ | $V_{IN}$ = 0 to 3.6 V | 0 | — | — | ±5.0 | μA |
| Off-state leakage current (switch off) | | $I_{SZ}$ | $V_{IS}$ = 0 to $V_{CC}$, $\overline{OE}$ = $V_{CC}$ | 2.3 to 3.6 | — | — | ±5.0 | μA |
| ON resistance (Note 2) | | $R_{ON}$ | $V_{IS}$ = 0 V, $I_{IS}$ = 30 mA (Note 1) | 3.0 | — | 4.5 | 9 | Ω |
| | | | $V_{IS}$ = 0.4 V, $I_{IS}$ = 30 mA (Note 1) | 3.0 | — | 5 | 9.5 | |
| | | | $V_{IS}$ = 3.0 V, $I_{IS}$ = 30 mA (Note 1) | 3.0 | — | 11 | 18 | |
| Delta $R_{ON}$ | | $\Delta R_{ON}$ | $V_{IS}$ = 0.4 V, 1.0 V, $I_{IS}$ = 30 mA | 3.0 | — | 0.5 | — | Ω |
| On-Resistance Flatness | | $R_{ON(flat)}$ | $V_{IN}$ = 0 V to 1.0 V, $I_{IS}$ = 30 mA | 3.0 | — | 1.2 | — | Ω |
| Quiescent supply current | | $I_{CC}$ | $V_{IN}$ = $V_{CC}$ or GND, $I_{OUT}$ = 0 | 3.6 | — | — | 2.0 | μA |
| Increase in $I_{CC}$ per input | | $\Delta I_{CC}$ | $V_{IN}$ = 1.8 V | 3.6 | — | — | 10.0 | μA |

Note 1: All typical values are at Ta = 25°C.

Note 2: Measured by the voltage drop between D+/D- and HSD+/HSD- pins at the indicated current through the switch. ON resistance is determined by the lower of the voltages on the two pins.

## AC Characteristics $V_{CC}$ = 3.3V ± 10% (Ta = –40 to 85°C)

| Characteristics | Symbol | Test Condition | $V_{CC}$ (V) | Min | Typ. | Max | Unit |
|---|---|---|---|---|---|---|---|
| Propagation Delay Time (Note) | tpd | $C_L$=5pF | 3.3 ± 0.3 | — | 0.25 | — | ns |
| Turn ON Time ( $\overline{OE}$ to Output) | $t_{ON}$ | $R_L$=50Ω, $C_L$=5pF | 3.3 ± 0.3 | — | 4 | 10 | ns |
| Turn OFF Time ( $\overline{OE}$ to Output) | $t_{OFF}$ | $R_L$=50Ω, $C_L$=5pF | 3.3 ± 0.3 | — | 3.2 | 9 | ns |
| Output skew between center port to any other port (Note) | $t_{SK(O)}$ | $C_L$=5pF | 3.3 ± 0.3 | — | 0.1 | — | ns |
| Skew of Opposite Transitions of the same output ($t_{pHL}$- $t_{pLH}$) (Note) | $t_{SK(P)}$ | $C_L$=5pF | 3.3 ± 0.3 | — | 0.1 | — | ns |
| Off Isolation (Non-Adjacent) | OIRR | $R_T$=50Ω, f=240MHz | 3.3 ± 0.3 | — | -27 | — | dB |
| Crosstalk(Non-Adjacent) | XTalk | $R_T$=50Ω, f=240MHz | 3.3 ± 0.3 | — | -60 | — | dB |
| -3dB Bandwidth | BW | $R_T$=50Ω, $C_L$=0pF | 3.3 ± 0.3 | — | 1100 | — | MHz |

Note: This parameter is guaranteed by design.

## Capacitive Characteristics (Ta = 25°C)

| Characteristics | Symbol | Test Condition | | $V_{CC}$ (V) | Typ. | Unit |
|---|---|---|---|---|---|---|
| Control pin input capacitance ( $\overline{OE}$ ) | $C_{IN}$ | $V_{IN}$ = 0 V | (Note) | 3.3 | 4 | pF |
| Switch terminal Off capacitance | $C_{I/O}$ | $V_{IS}$ = 0 V, $\overline{OE}$ = $V_{CC}$ | (Note) | 3.3 | 2 | pF |
| Switch terminal On capacitance | $C_{I/O}$ | $V_{IS}$ = 0 V, $\overline{OE}$ = GND | (Note) | 3.3 | 4 | pF |

Note: This parameter is guaranteed by design.

## AC Test Circuit Load / Waveform

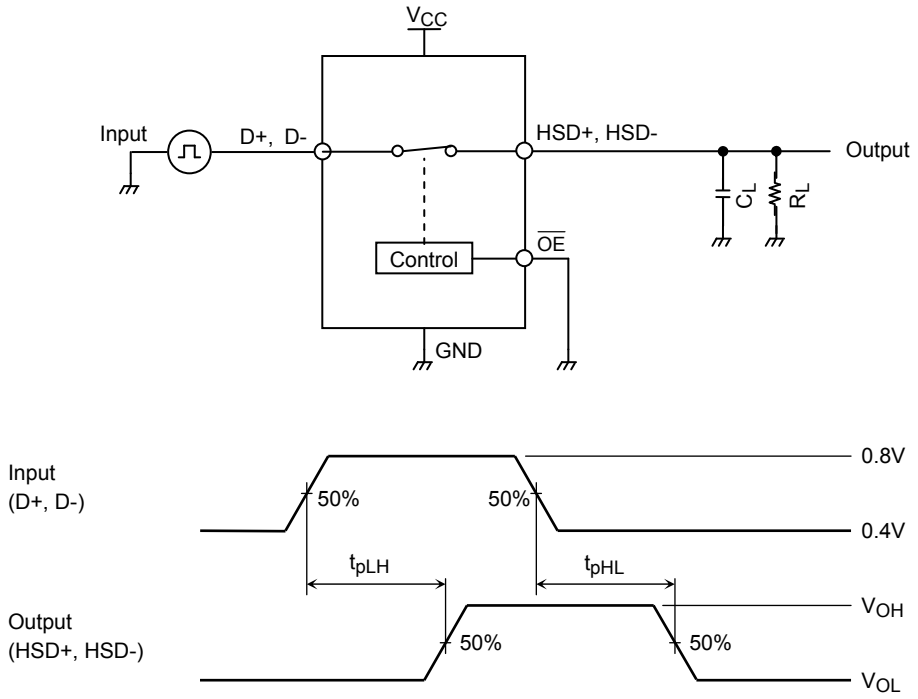


**Figure 1: Propagation Delay Time ($t_{pLH}$, $t_{pHL}$)**

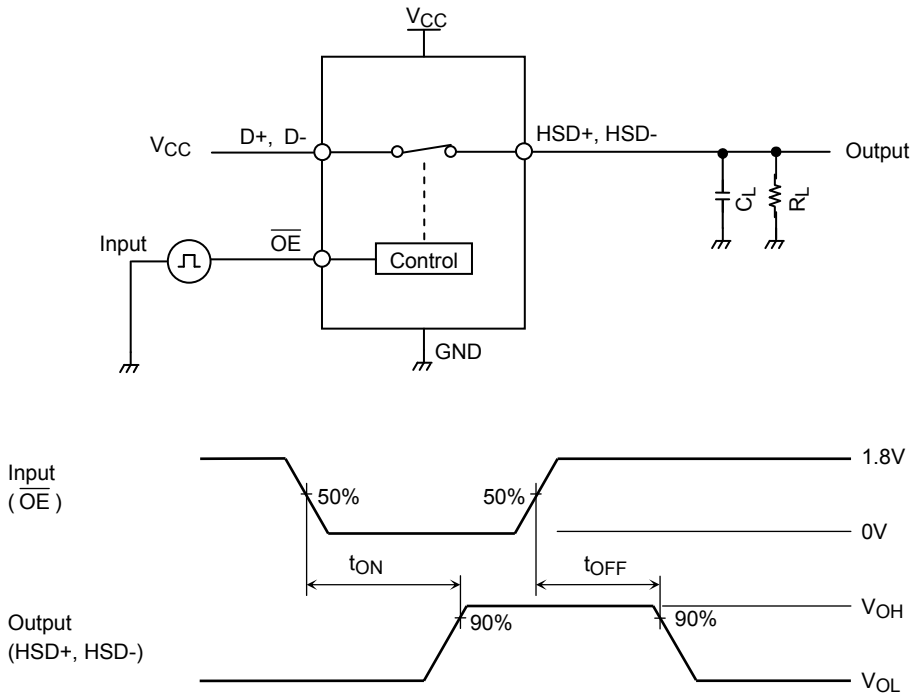


**Figure 2: Turn ON/Turn OFF ($t_{ON}$, $t_{OFF}$)**

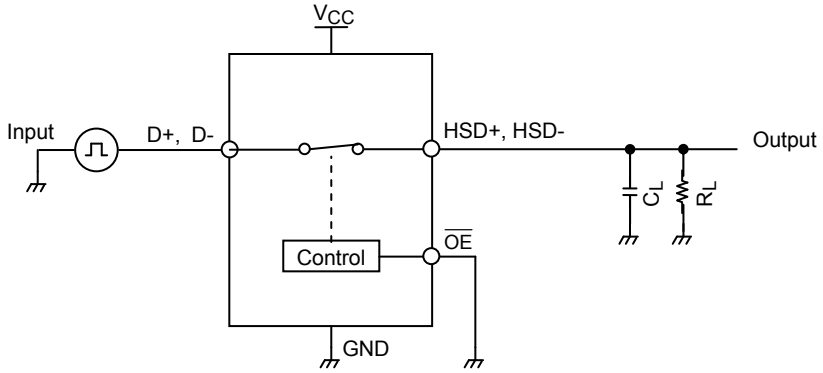


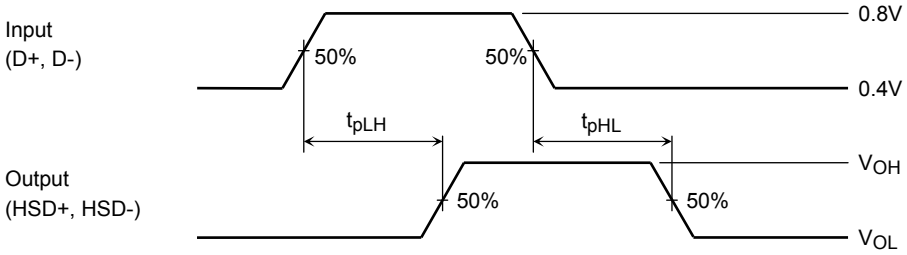


**PULSE SKEW** $t_{SK(P)} = |t_{pLH} - t_{pHL}|$

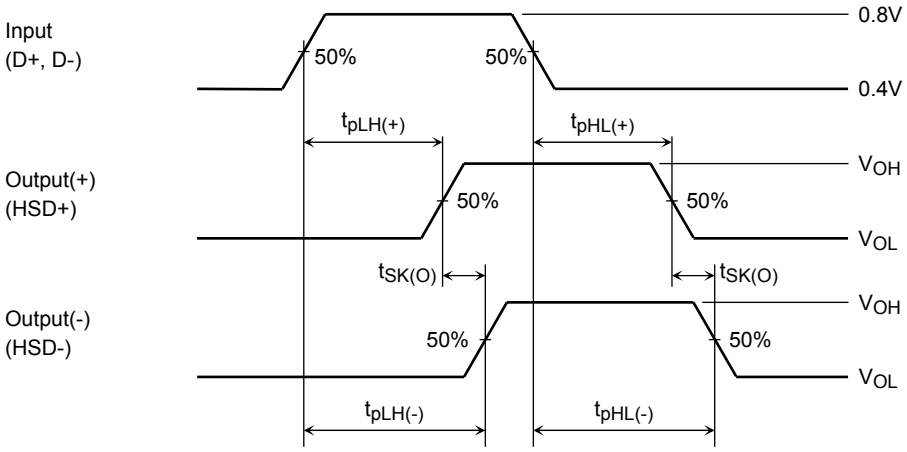


**OUTPUT SKEW** $t_{SK(O)} = |t_{pLH(+)} - t_{pLH(-)}|$ or $|t_{pHL(+)} - t_{pHL(-)}|$

**Figure 3: Skew of Opposite Transitions of the same output, Output skew**

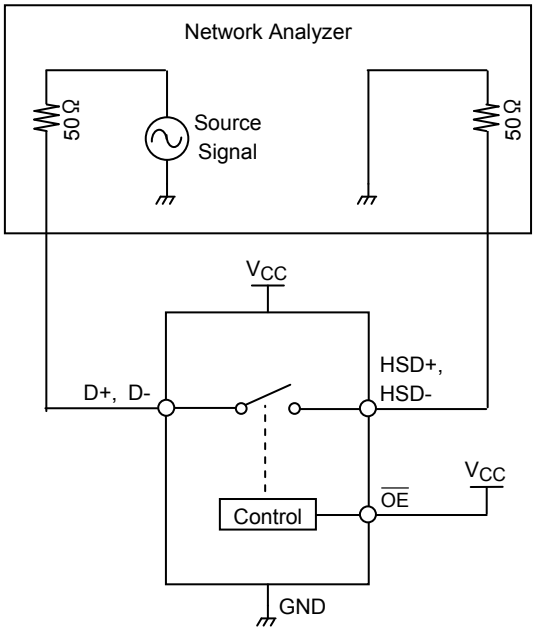


**Figure 4: Channel OFF Isolation**

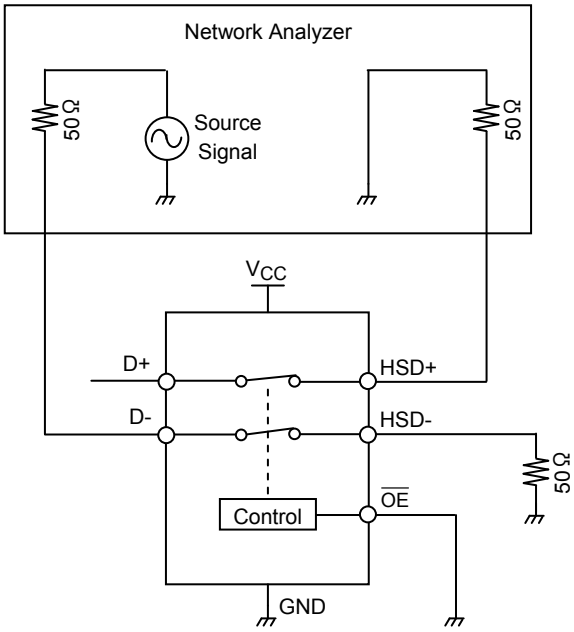


**Figure 5: Crosstalk**

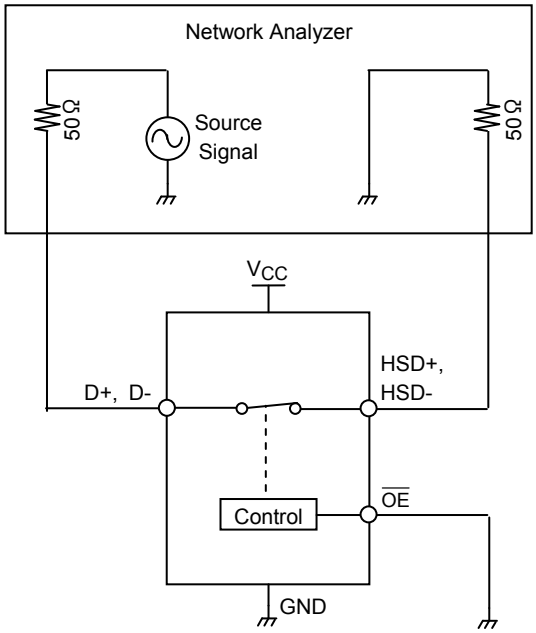


**Figure 6: -3dB Bandwidth**

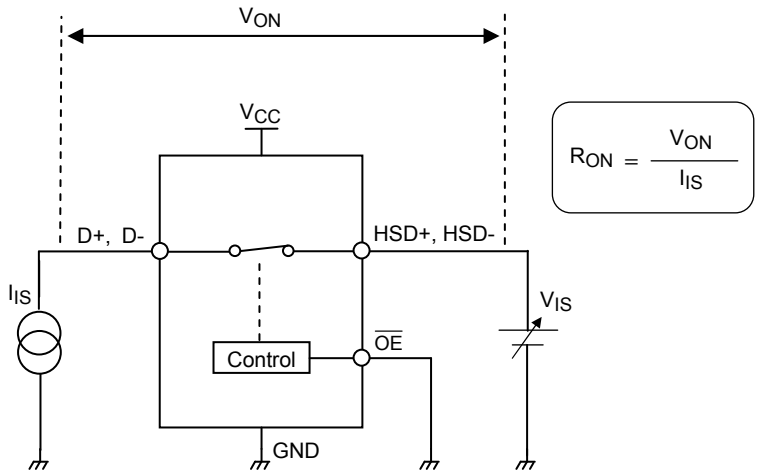


**Figure 7: ON Resistance**

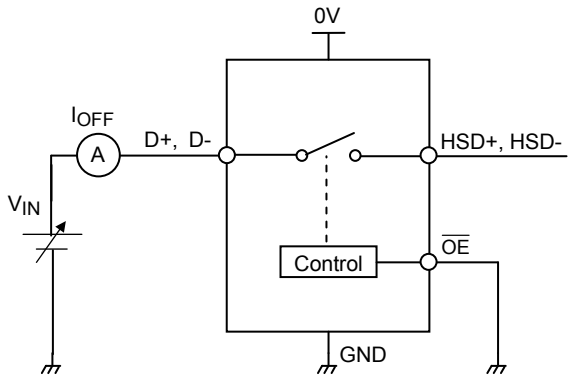


**Figure 8: Power off Leakage Current**

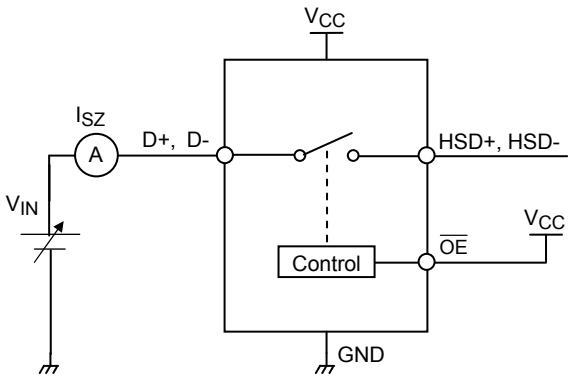


**Figure 9: Off-State Leakage Current**

## Package Dimension

SSOP8-P-0.50A Unit : mm

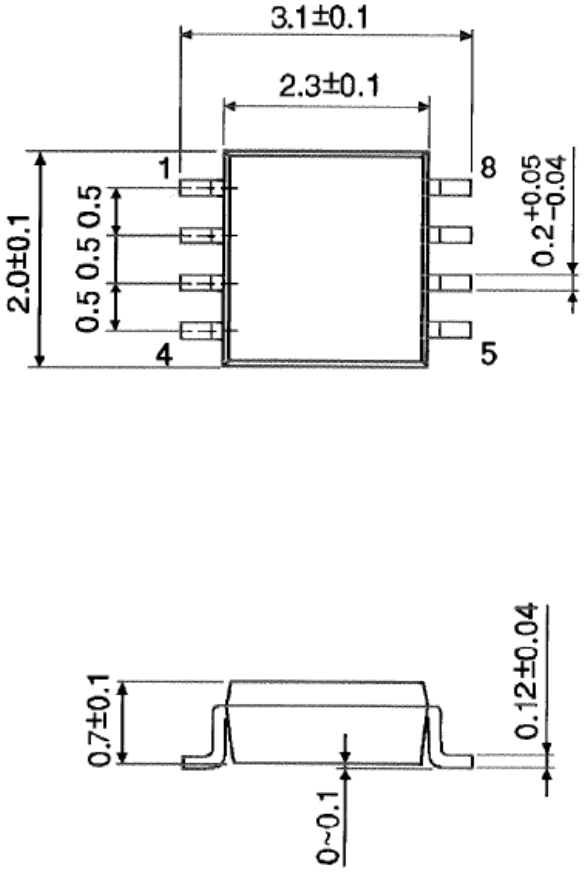


Weight: 0.01 g (Typ.)

## RESTRICTIONS ON PRODUCT USE

- Toshiba Corporation, and its subsidiaries and affiliates (collectively “TOSHIBA”), reserve the right to make changes to the information in this document, and related hardware, software and systems (collectively “Product”) without notice.
- This document and any information herein may not be reproduced without prior written permission from TOSHIBA. Even with TOSHIBA’s written permission, reproduction is permissible only if reproduction is without alteration/omission.
- Though TOSHIBA works continually to improve Product’s quality and reliability, Product can malfunction or fail. Customers are responsible for complying with safety standards and for providing adequate designs and safeguards for their hardware, software and systems which minimize risk and avoid situations in which a malfunction or failure of Product could cause loss of human life, bodily injury or damage to property, including data loss or corruption. Before customers use the Product, create designs including the Product, or incorporate the Product into their own applications, customers must also refer to and comply with (a) the latest versions of all relevant TOSHIBA information, including without limitation, this document, the specifications, the data sheets and application notes for Product and the precautions and conditions set forth in the “TOSHIBA Semiconductor Reliability Handbook” and (b) the instructions for the application with which the Product will be used with or for. Customers are solely responsible for all aspects of their own product design or applications, including but not limited to (a) determining the appropriateness of the use of this Product in such design or applications; (b) evaluating and determining the applicability of any information contained in this document, or in charts, diagrams, programs, algorithms, sample application circuits, or any other referenced documents; and (c) validating all operating parameters for such designs and applications. **TOSHIBA ASSUMES NO LIABILITY FOR CUSTOMERS’ PRODUCT DESIGN OR APPLICATIONS.**
- Product is intended for use in general electronics applications (e.g., computers, personal equipment, office equipment, measuring equipment, industrial robots and home electronics appliances) or for specific applications as expressly stated in this document. Product is neither intended nor warranted for use in equipment or systems that require extraordinarily high levels of quality and/or reliability and/or a malfunction or failure of which may cause loss of human life, bodily injury, serious property damage or serious public impact (“Unintended Use”). Unintended Use includes, without limitation, equipment used in nuclear facilities, equipment used in the aerospace industry, medical equipment, equipment used for automobiles, trains, ships and other transportation, traffic signaling equipment, equipment used to control combustions or explosions, safety devices, elevators and escalators, devices related to electric power, and equipment used in finance-related fields. Do not use Product for Unintended Use unless specifically permitted in this document.
- Do not disassemble, analyze, reverse-engineer, alter, modify, translate or copy Product, whether in whole or in part.
- Product shall not be used for or incorporated into any products or systems whose manufacture, use, or sale is prohibited under any applicable laws or regulations.
- The information contained herein is presented only as guidance for Product use. No responsibility is assumed by TOSHIBA for any infringement of patents or any other intellectual property rights of third parties that may result from the use of Product. No license to any intellectual property right is granted by this document, whether express or implied, by estoppel or otherwise.
- **ABSENT A WRITTEN SIGNED AGREEMENT, EXCEPT AS PROVIDED IN THE RELEVANT TERMS AND CONDITIONS OF SALE FOR PRODUCT, AND TO THE MAXIMUM EXTENT ALLOWABLE BY LAW, TOSHIBA (1) ASSUMES NO LIABILITY WHATSOEVER, INCLUDING WITHOUT LIMITATION, INDIRECT, CONSEQUENTIAL, SPECIAL, OR INCIDENTAL DAMAGES OR LOSS, INCLUDING WITHOUT LIMITATION, LOSS OF PROFITS, LOSS OF OPPORTUNITIES, BUSINESS INTERRUPTION AND LOSS OF DATA, AND (2) DISCLAIMS ANY AND ALL EXPRESS OR IMPLIED WARRANTIES AND CONDITIONS RELATED TO SALE, USE OF PRODUCT, OR INFORMATION, INCLUDING WARRANTIES OR CONDITIONS OF MERCHANTABILITY, FITNESS FOR A PARTICULAR PURPOSE, ACCURACY OF INFORMATION, OR NONINFRINGEMENT.**
- Do not use or otherwise make available Product or related software or technology for any military purposes, including without limitation, for the design, development, use, stockpiling or manufacturing of nuclear, chemical, or biological weapons or missile technology products (mass destruction weapons). Product and related software and technology may be controlled under the Japanese Foreign Exchange and Foreign Trade Law and the U.S. Export Administration Regulations. Export and re-export of Product or related software or technology are strictly prohibited except in compliance with all applicable export laws and regulations.
- Please contact your TOSHIBA sales representative for details as to environmental matters such as the RoHS compatibility of Product. Please use Product in compliance with all applicable laws and regulations that regulate the inclusion or use of controlled substances, including without limitation, the EU RoHS Directive. TOSHIBA assumes no liability for damages or losses occurring as a result of noncompliance with applicable laws and regulations.