CMOS Digital Integrated Circuits Silicon Monolithic

TC7SB3157CFU

1. Functional Description

- Single 1-of-2 Multiplexer/Demultiplexer

2. General

The TC7SB3157CFU is a high-speed CMOS single 1-of-2 multiplexer/demultiplexer. The low ON resistance of the switch allows connections to be made with minimal propagation delay time.

This device is 1 to 2 multiplexer/demultiplexer controlled by the select input (S). The A input is connected to B1 or B2 output based on the selection of Control input (S).

All inputs are equipped with protection circuits against static discharge.

3. Features

(1) Operating voltage: V_{CC} = 1.65 to 5.5 V

(2) ON capacitance: $C_{I/O}$ = 15 pF Switch On (typ.) @V_{CC} = 5.0 V

(3) ON resistance: R_{ON} = 4 Ω (typ.) @V_{CC} = 4.5 V, V_{IS} = 0 V

(4) ESD performance: Machine model ≥ ±200 V, Human body model ≥ ±2000 V

(5) Package: US6

4. Packaging and Pin Assignment (Top View)

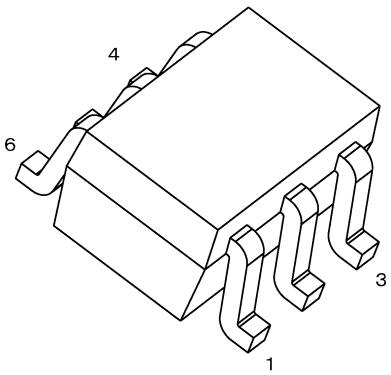

SSOP6-P-0.65S

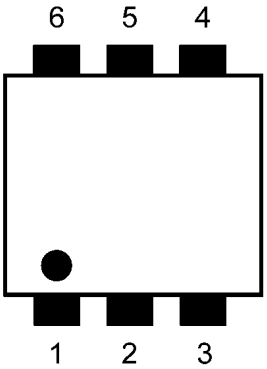

1: B2
2: GND
3: B1
4: A
5: V_{CC}
6: S

5. Marking

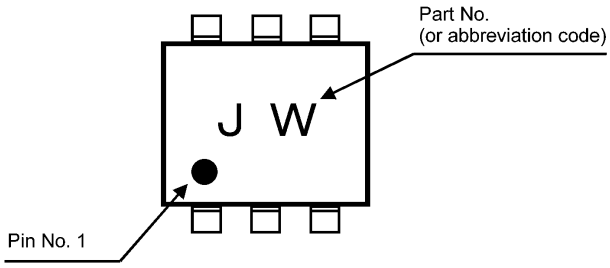

Fig. 5.1 Marking

6. Block Diagram

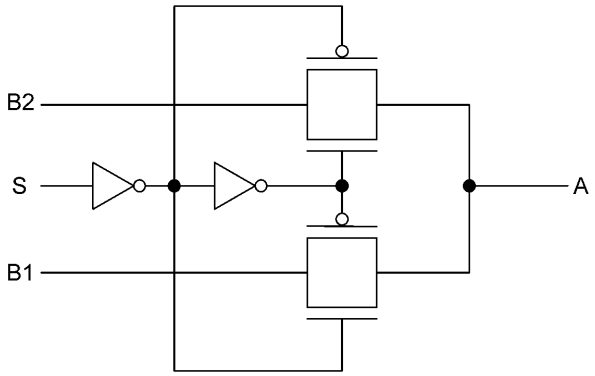

Fig. 6.1 Block Diagram

7. Principle of Operation

7.1. Truth Table

Input	Function
S	
L	A port = B1 port
H	A port = B2 port

Fig. 7.1. Truth Table

8. Absolute Maximum Ratings (Note)

Characteristics	Symbol	Note	Rating	Unit
Supply voltage	V_{CC}		-0.5 to 7.0	V
DC input voltage (S)	V_{IN}		-0.5 to 7.0	
Switch terminal I/O voltage	V_S		-0.5 to V_{CC} + 0.5	
Clamp diode current	I_{IK}		-50	mA
Switch terminal I/O current	I_S		50	
Power dissipation	P_D		200	mW
DC V_{CC}/ground current	I_{CC}/I_{GND}		±100	mA
Storage temperature	T_{stg}		-65 to 150	°C

Note: Exceeding any of the absolute maximum ratings, even briefly, lead to deterioration in IC performance or even destruction.
Using continuously under heavy loads (e.g. the application of high temperature/current/voltage and the significant change in temperature, etc.) may cause this product to decrease in the reliability significantly even if the operating conditions (i.e. operating temperature/current/voltage, etc.) are within the absolute maximum ratings and the operating ranges.
Please design the appropriate reliability upon reviewing the Toshiba Semiconductor Reliability Handbook ("Handling Precautions"/"Derating Concept and Methods") and individual reliability data (i.e. reliability test report and estimated failure rate, etc).

9. Operating Ranges (Note)

Characteristics	Symbol	Note	Rating	Unit
Supply voltage	V_{CC}		1.65 to 5.5	V
DC input voltage (S)	V_{IN}		0 to 5.5	
Switch terminal I/O voltage	V_S		0 to V_{CC}	
Operating temperature	T_{opr}		-40 to 85	°C
Input rise time	dt/dv		0 to 10	ns/V
Input fall time			0 to 10	

Note: The operating ranges must be maintained to ensure the normal operation of the device.
Unused inputs and bus inputs must be tied to either V_{CC} or GND.

10. Electrical Characteristics

10.1. DC Characteristics

Unless otherwise specified, T_a = -40 to 85°C

Characteristics	Symbol	Note	Test Condition	V_{CC} (V)	Min	Typ.	Max	Unit
High-level input voltage	V_{IH}		—	1.65 to 1.95	0.8 × V_{CC}	—	—	V
				2.3 to 5.5	0.7 × V_{CC}	—	—	
Low-level input voltage	V_{IL}		—	1.65 to 1.95	—	—	0.2 × V_{CC}	
				2.3 to 5.5	—	—	0.3 × V_{CC}	
Input leakage current	I_{IN}		V_{IN} = 0 to 5.5 V	1.65 to 5.5	—	—	±1.0	μA
Switch terminal OFF-state leakage current	I_{SZ}		B1, B2 = 0 to V_{CC}	1.65 to 5.5	—	—	±10	
ON resistance	R_{ON}	(Note 1), (Note 2)	V_{IS} = 0 V, I_{IS} = 30 mA	4.5	—	4	7	Ω
			V_{IS} = 2.4 V, I_{IS} = 30 mA	4.5	—	5	12	
			V_{IS} = 4.5 V, I_{IS} = 30 mA	4.5	—	6	10	
			V_{IS} = 0 V, I_{IS} = 24 mA	3.0	—	5	9	
			V_{IS} = 3.0 V, I_{IS} = 24 mA	3.0	—	7	14	
			V_{IS} = 0 V, I_{IS} = 8 mA	2.3	—	6	12	
			V_{IS} = 2.3 V, I_{IS} = 8 mA	2.3	—	9	18	
			V_{IS} = 0 V, I_{IS} = 4 mA	1.65	—	8	20	
			V_{IS} = 1.65 V, I_{IS} = 4 mA	1.65	—	15	30	
Quiescent supply current	I_{CC}		V_{IN} = V_{CC} or GND, I_{OUT} = 0 A	5.5	—	—	10	μA
	ΔI_{CC}		V_{IN} = V_{CC} - 0.6 V	5.5	—	—	50	

Note 1: All typical values are at T_a = 25°C.

Note 2: Measured by the voltage drop between A and B pins at the indicated current through the switch. On resistance is determined by the lower of the voltages on the two (A or B) pins.

10.2. AC Characteristics

Unless otherwise specified, T_a = -40 to 85°C

Characteristics	Symbol	Note	Test Condition	V_{CC} (V)	Min	Max	Unit
Output enable time	t_{pZL} t_{pZH}		Fig. 10.2.1, 10.2.2, Table 10.2.1.	5.5 ± 0.5	—	4	ns
				3.3 ± 0.3	—	6	
				2.5 ± 0.2	—	8	
				1.8 ± 0.15	—	16	
Output disable time	t_{pLZ} t_{pHZ}		Fig. 10.2.1, 10.2.2, Table 10.2.1.	5.5 ± 0.5	—	4.5	
				3.3 ± 0.3	—	7	
				2.5 ± 0.2	—	9	
				1.8 ± 0.15	—	16	

10.3. Capacitive Characteristics

Unless otherwise specified, T_a = 25°C

Characteristics	Symbol	Note	Test Circuit	V_{CC} (V)	Typ.	Unit
Input capacitance	C_{IN}	(Note 1)	V_{IN} = 0 V	5.0	4	pF
Switch terminal OFF capacitance (B port)	$C_{I/O}$		$V_{I/O}$ = 0 V	5.0	5	
Switch terminal ON capacitance (A port)				5.0	15	
Switch terminal ON capacitance (B port)				5.0	15	

Note 1: Parameter guaranteed by design.

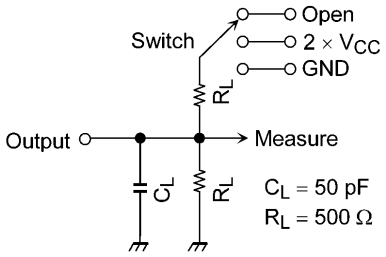

Fig. 10.2.1 AC Test Circuit

Table 10.2.1 Parameter for AC Test Circuit

Parameter	Switch
t_{pLZ}, t_{pZL}	2 × V_{CC}
t_{pHZ}, t_{pZH}	GND

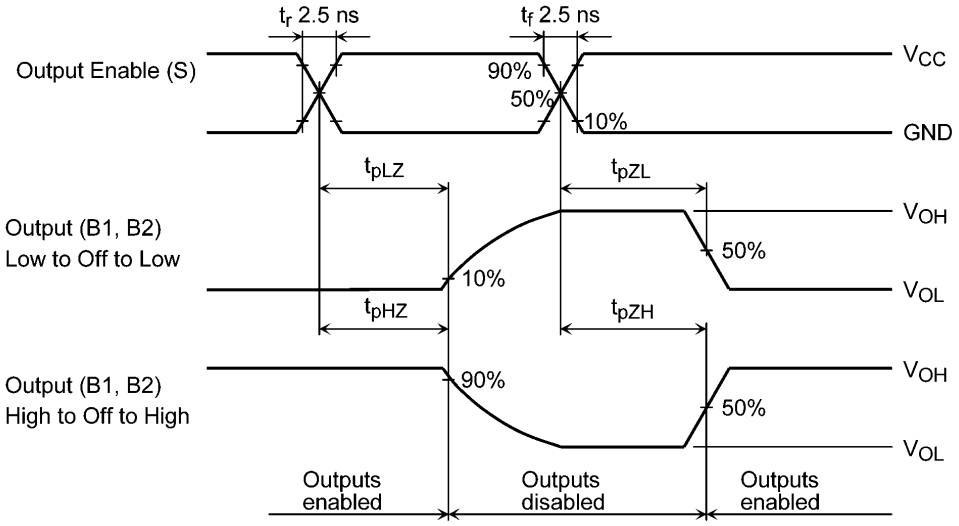

Fig. 10.2.2 AC Waveform t_{pLZ}, t_{pHZ}, t_{pZL}, t_{pZH}

11. Rise and Fall Time (t_r/t_f)

The $t_{r(out)}$ and $t_{f(out)}$ values of the output signals are affected by the CR time constant of the input, which consists of the switch terminal capacitance ($C_{I/O}$) and the on-resistance (R_{ON}) of the input.
In practice, the $t_{r(out)}$ and $t_{f(out)}$ values are also affected by the circuit's capacitance and resistance components other than the capacitance of TC7SB3157CFU.
The $t_r/t_{f(out)}$ values can be approximated as follows.
(Figure 11.1, Table 11.1 shows the test circuit.)

$t_r/t_{f(out)}$ (approx) = - ($C_{I/O}$ + C_L) · (R_{DRIVE} + R_{ON}) · ln ((((V_{OH} - V_{OL}) - V_M) / (V_{OH} - V_{OL}))
Where, R_{DRIVE} is the output impedance of the previous-stage circuit.

Calculation example:
$t_{r(out)}$ (approx) = - (15 + 15) E - 12 · (120 + 4) · ln ((((4.5 - 0) - 2.25) / (4.5 - 0)) ≈ 2.6 ns

Calculation conditions:
V_{CC} = 4.5 V, C_L = 15 pF, R_{DRIVE} = 120 Ω (output impedance of the previous IC), V_M = 2.25 V (V_{CC}/2)
Output of the previous IC = digital (i.e., high-level voltage = V_{CC}, low-level voltage = GND)

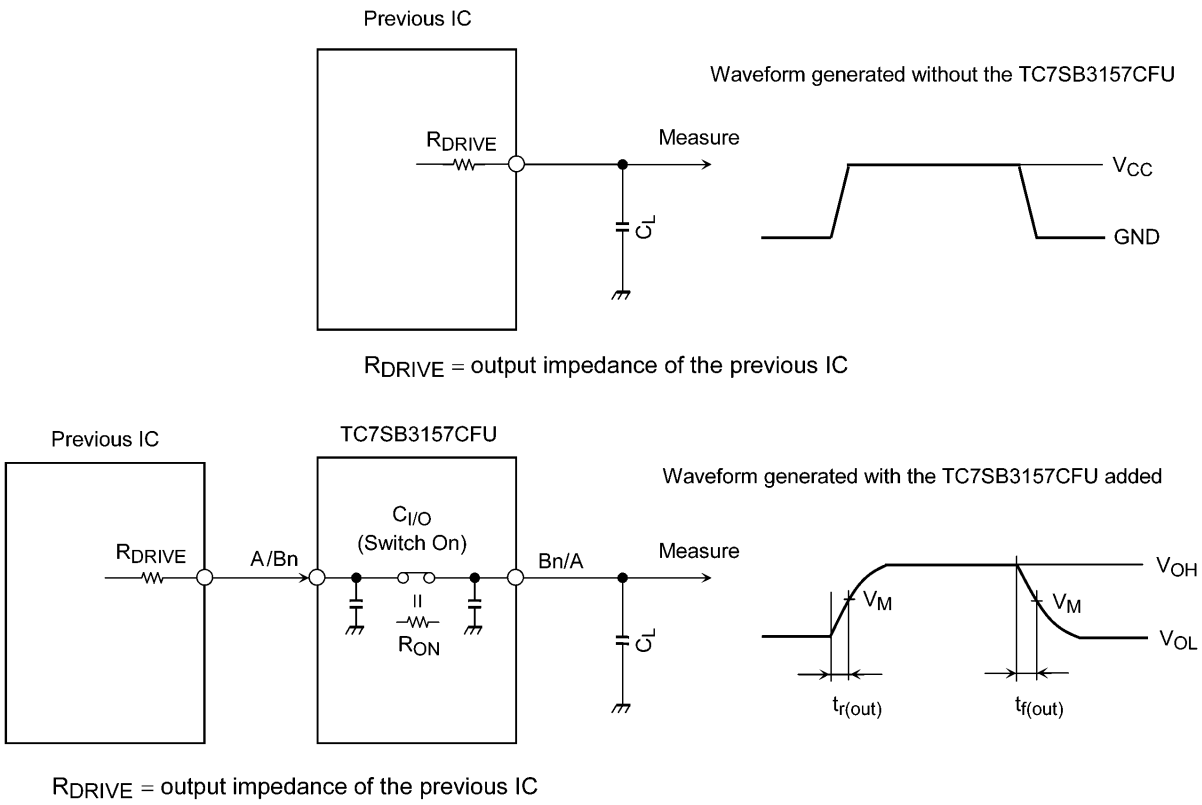

Fig. 11.1 Calculation Circuit

Table 11.1 Calculation Circuit

Characteristics	V_{CC} = 5.0 ± 0.5 V
V_M	V_{CC}/2

12. Characteristics Curves (Note)

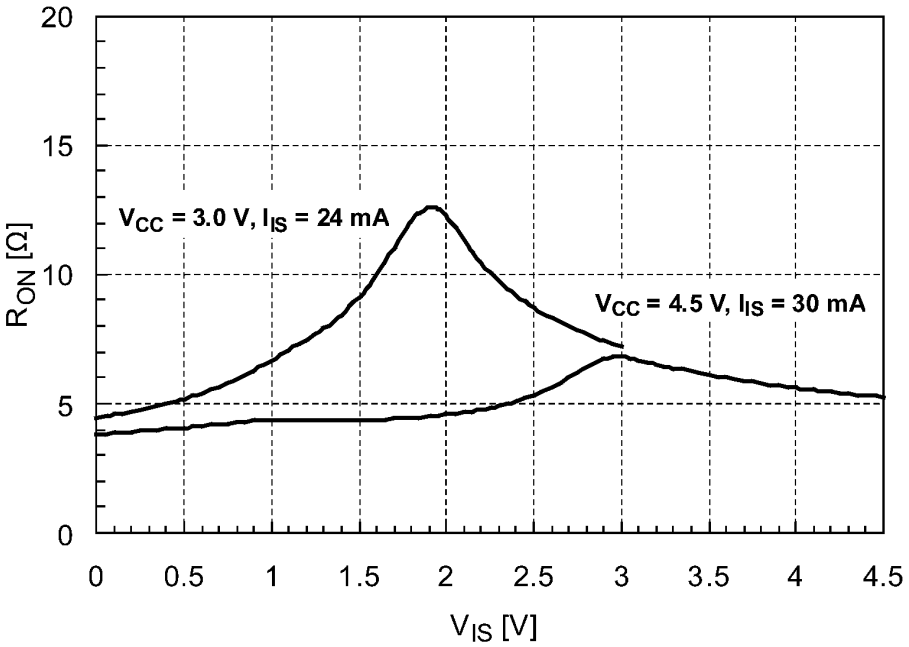

Fig. 12.1 R_{ON} - V_{IS} Characteristics Curves

Note: The above characteristics curves are presented for reference only and not guaranteed by production test, unless otherwise noted.

Package Dimensions

Unit: mm

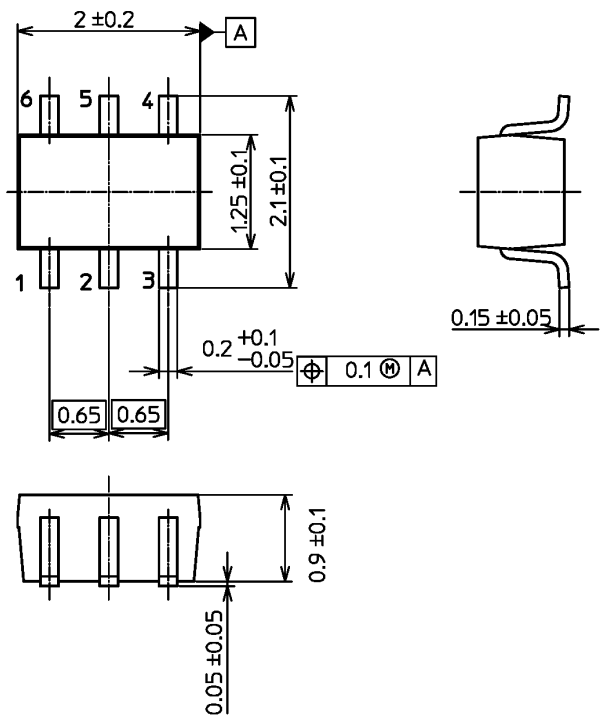

Weight: 6.8 mg (typ.)

Package Name(s)
TOSHIBA: SSOP6-P-0.65S
Nickname: US6

RESTRICTIONS ON PRODUCT USE

- Toshiba Corporation, and its subsidiaries and affiliates (collectively "TOSHIBA"), reserve the right to make changes to the information in this document, and related hardware, software and systems (collectively "Product") without notice.
- This document and any information herein may not be reproduced without prior written permission from TOSHIBA. Even with TOSHIBA's written permission, reproduction is permissible only if reproduction is without alteration/omission.
- Though TOSHIBA works continually to improve Product's quality and reliability, Product can malfunction or fail. Customers are responsible for complying with safety standards and for providing adequate designs and safeguards for their hardware, software and systems which minimize risk and avoid situations in which a malfunction or failure of Product could cause loss of human life, bodily injury or damage to property, including data loss or corruption. Before customers use the Product, create designs including the Product, or incorporate the Product into their own applications, customers must also refer to and comply with (a) the latest versions of all relevant TOSHIBA information, including without limitation, this document, the specifications, the data sheets and application notes for Product and the precautions and conditions set forth in the "TOSHIBA Semiconductor Reliability Handbook" and (b) the instructions for the application with which the Product will be used with or for. Customers are solely responsible for all aspects of their own product design or applications, including but not limited to (a) determining the appropriateness of the use of this Product in such design or applications; (b) evaluating and determining the applicability of any information contained in this document, or in charts, diagrams, programs, algorithms, sample application circuits, or any other referenced documents; and (c) validating all operating parameters for such designs and applications. **TOSHIBA ASSUMES NO LIABILITY FOR CUSTOMERS' PRODUCT DESIGN OR APPLICATIONS.**
- Product is intended for use in general electronics applications (e.g., computers, personal equipment, office equipment, measuring equipment, industrial robots and home electronics appliances) or for specific applications as expressly stated in this document. Product is neither intended nor warranted for use in equipment or systems that require extraordinarily high levels of quality and/or reliability and/or a malfunction or failure of which may cause loss of human life, bodily injury, serious property damage or serious public impact ("Unintended Use"). Unintended Use includes, without limitation, equipment used in nuclear facilities, equipment used in the aerospace industry, medical equipment, equipment used for automobiles, trains, ships and other transportation, traffic signaling equipment, equipment used to control combustions or explosions, safety devices, elevators and escalators, devices related to electric power, and equipment used in finance-related fields. Do not use Product for Unintended Use unless specifically permitted in this document.
- Do not disassemble, analyze, reverse-engineer, alter, modify, translate or copy Product, whether in whole or in part.
- Product shall not be used for or incorporated into any products or systems whose manufacture, use, or sale is prohibited under any applicable laws or regulations.
- The information contained herein is presented only as guidance for Product use. No responsibility is assumed by TOSHIBA for any infringement of patents or any other intellectual property rights of third parties that may result from the use of Product. No license to any intellectual property right is granted by this document, whether express or implied, by estoppel or otherwise.
- **ABSENT A WRITTEN SIGNED AGREEMENT, EXCEPT AS PROVIDED IN THE RELEVANT TERMS AND CONDITIONS OF SALE FOR PRODUCT, AND TO THE MAXIMUM EXTENT ALLOWABLE BY LAW, TOSHIBA (1) ASSUMES NO LIABILITY WHATSOEVER, INCLUDING WITHOUT LIMITATION, INDIRECT, CONSEQUENTIAL, SPECIAL, OR INCIDENTAL DAMAGES OR LOSS, INCLUDING WITHOUT LIMITATION, LOSS OF PROFITS, LOSS OF OPPORTUNITIES, BUSINESS INTERRUPTION AND LOSS OF DATA, AND (2) DISCLAIMS ANY AND ALL EXPRESS OR IMPLIED WARRANTIES AND CONDITIONS RELATED TO SALE, USE OF PRODUCT, OR INFORMATION, INCLUDING WARRANTIES OR CONDITIONS OF MERCHANTABILITY, FITNESS FOR A PARTICULAR PURPOSE, ACCURACY OF INFORMATION, OR NONINFRINGEMENT.**
- Do not use or otherwise make available Product or related software or technology for any military purposes, including without limitation, for the design, development, use, stockpiling or manufacturing of nuclear, chemical, or biological weapons or missile technology products (mass destruction weapons). Product and related software and technology may be controlled under the Japanese Foreign Exchange and Foreign Trade Law and the U.S. Export Administration Regulations. Export and re-export of Product or related software or technology are strictly prohibited except in compliance with all applicable export laws and regulations.
- Please contact your TOSHIBA sales representative for details as to environmental matters such as the RoHS compatibility of Product. Please use Product in compliance with all applicable laws and regulations that regulate the inclusion or use of controlled substances, including without limitation, the EU RoHS Directive. TOSHIBA assumes no liability for damages or losses occurring as a result of noncompliance with applicable laws and regulations.